SMART SENSOR

FS/VS20

Product Reference Guide

MN-005509-03EN Rev A

ZEBRA

Zebra Technologies | 3 Overlook Point | Lincolnshire, IL 60069 USA
zebra.com

Copyright

2026/09/02

The Zebra wordmark and logo are trademarks of Zebra Technologies Corp., registered in many jurisdictions worldwide. All other trademarks are the property of their respective owners. ©2026 Zebra Technologies Corp. and/or its affiliates.

Information in this document is subject to change without notice. The software described in this document is furnished under a license agreement or nondisclosure agreement. The software may be used or copied only in accordance with the terms of those agreements.

For further information regarding legal and proprietary statements, please go to:

SOFTWARE: zebra.com/informationpolicy.
COPYRIGHTS: zebra.com/copyright.
PATENTS: ip.zebra.com.
WARRANTY: zebra.com/warranty.
END USER LICENSE AGREEMENT: zebra.com/eula.

Terms of Use

Proprietary Statement

This manual contains proprietary information of Zebra Technologies Corporation and its subsidiaries ("Zebra Technologies"). It is intended solely for the information and use of parties operating and maintaining the equipment described herein. Such proprietary information may not be used, reproduced, or disclosed to any other parties for any other purpose without the express, written permission of Zebra Technologies.

Product Improvements

Continuous improvement of products is a policy of Zebra Technologies. All specifications and designs are subject to change without notice.

Liability Disclaimer

Zebra Technologies takes steps to ensure that its published Engineering specifications and manuals are correct; however, errors do occur. Zebra Technologies reserves the right to correct any such errors and disclaims liability resulting therefrom.

Limitation of Liability

In no event shall Zebra Technologies or anyone else involved in the creation, production, or delivery of the accompanying product (including hardware and software) be liable for any damages whatsoever (including, without limitation, consequential damages including loss of business profits, business interruption, or loss of business information) arising out of the use of, the results of use of, or inability to use such product, even if Zebra Technologies has been advised of the possibility of such damages. Some jurisdictions do not allow the exclusion or limitation of incidental or consequential damages, so the above limitation or exclusion may not apply to you.

Contents

About this Guide **6**

Notational Conventions 6

Icon Conventions 6

Service Information 7

Getting Started **8**

Configurations 8

Accessories 11

Installation **12**

Mounting Instructions 12

Installing the Deflective Mirror 14

Compact Bracket Mounting Options 15

Mounting the Device Using the L-Bracket Accessory 16

xS20 Connections 17

Torque Specification 18

Power Sources 18

12 Pin M12 Power Input 18

Power Over Ethernet 19

Using the Device **20**

Data Capture 20

User Interface Label 20

LED and Beeper Indications 21

Contents

General Purpose Input and Outputs....23
GPIO Summary....24
Optically Coupled GPIO....24
xS20 GPIO Wiring Diagrams....26
Thermal Management....28
Grounding for Electro-Magnetic Compliance and ESD Safe....29

Maintenance....30
Known Harmful Ingredients....30
Approved Cleaning Agents....30
Tolerable Industrial Fluids and Chemicals....31
Cleaning the Device....31

Troubleshooting....32
Communicating With the Device....32
Pinging the Device via IP....32
Device Discovery Troubleshooting Methods....32
Factory Reset the Device....32
Power Cycling the Device....33

Technical Reference....34
xS20 Specifications....34
xS20 Dimensional Drawings....36
Deflective Mirror Dimensions....37
Cable Pin Outs....38
Power and IO Connector....38
Using Autofocus Barcodes....39
Using Parameter Barcodes....40
HID Keyboard Keystroke Delay....40
HID Keyboard Special Keystroke Delay....40
HID CDC Serial....40
HID CDC Serial Results....41
USB Power Configuration....41

Contents

Input/Output (IO) Interface Configuration 41
Barcode Configuration Mode 43
Change Active Job Slot Number 43
Change Startup Job Slot Number 45
Reboot Device 47
Restart Core Services 47
Reading Diagrams 48
ECC 200 Reading Distances 50
Code 128 Reading Distances 51

About this Guide

This guide provides information on configurations, specifications, power sources, connectivity options, LED indicators, and maintenance guidelines for using the scanner

Notational Conventions

The following conventions make the content of this document easy to navigate.

- **Bold** text is used to highlight the following:
  - Dialog box, window, and screen names
  - Dropdown list and list box names
  - Checkbox and radio button names
  - Icons on a screen
  - Key names on a keypad
  - Button names on a screen
- Bullets (•) indicate:
  - Action items
  - List of alternatives
  - Lists of required steps that are not necessarily sequential
- Sequential lists (for example, those that describe step-by-step procedures) appear as numbered lists.

Icon Conventions

The documentation set is designed to give the reader more visual clues. The following visual indicators are used throughout the documentation set.



NOTE: The text here indicates information that is supplemental for you to know and that is not required to complete a task.



IMPORTANT: The text here indicates information that is important for you to know.

CAUTION: If the precaution is not heeded, you could receive a minor or moderate injury.

WARNING: If danger is not avoided, you CAN be seriously injured or killed.

DANGER: If danger is not avoided, you WILL be seriously injured or killed.

Service Information

If you have a problem with your equipment, contact Zebra Global Customer Support for your region.

Contact information is available at: zebra.com/support. When contacting support, please have the following information available:

- Serial number of the unit
- Model number or product name
- Software/firmware type and version number

Zebra responds to calls by email, telephone, or fax within the time limits set forth in support agreements.

If your problem cannot be solved by Zebra Customer Support, you may need to return your equipment for servicing and will be given specific directions. Zebra is not responsible for any damages incurred during shipment if the approved shipping container is not used. Shipping the units improperly can possibly void the warranty.

If you purchased your Zebra business product from a Zebra business partner, contact that business partner for support.

Getting Started

This section provides information on device specifications, supported accessories, and compatible software license types.

Configurations

Fixed Industrial Scanning (FS) devices are equipped with a USB or PoE scanner with autofocus, while Vision System (VS) devices are equipped with a smart PoE Sensor with adjustable focus

NOTE: The xS20 (including configurations with a polarizer) is not suited for use with high-powered lasers typically used for part marking (such as a YAG laser).

Table 1 Configurations

Device	Description
FS20	
FS20-SR10D3-2400W	FS20 Fixed Industrial Power over Ethernet scanner, auto focus, standard range, 1.0 MP, DPM with fast 2D barcode decoder, Ethernet with Power over Ethernet, serial and industrial protocols, red illumination, polarizer filter, plastic exit window, Worldwide
FS20-SR10D3-2L00K	FS20 Fixed Industrial Power over Ethernet scanner, auto focus, standard range, 1.0 MP, fast 1D-2D decoder with DPM, Ethernet with Power over Ethernet, serial and industrial protocols, red illumination, plastic exit window, India/Korea
FS20-SR10D3-3L00W	FS20 Fixed Industrial Power over Ethernet scanner, auto focus, standard range, 1.0 MP, fast 1D-2D decoder with DPM, Ethernet with Power over Ethernet, serial and industrial protocols, white illumination, plastic exit window, Worldwide
FS20-SR10D3-2400K	FS20 Fixed Industrial Power over Ethernet scanner, auto focus, standard range, 1.0 MP, fast 1D-2D decoder with DPM, Ethernet with Power over Ethernet, serial and industrial protocols, red illumination, polarizer filter, plastic exit window, India/Korea
FS20-SR10D3-3400W	FS20 Fixed Industrial Power over Ethernet scanner, auto focus, standard range, 1.0 MP, fast 1D-2D decoder with DPM, Ethernet with Power over Ethernet, serial and industrial protocols, white illumination, polarizer filter, plastic exit window, Worldwide

Table 1 Configurations (Continued)

Device	Description
FS20-SR10D3-2L00W	FS20 Fixed Industrial Power over Ethernet scanner, auto focus, standard range, 1.0 MP, fast 1D-2D decoder with DPM, Ethernet with Power over Ethernet, serial and industrial protocols, red illumination, plastic exit window, Worldwide
VS20	
VS20-SR10P2-2C00K	VS20 Smart Ethernet Sensor, adjustable focus, standard range, 1.0 MP, sensor toolset with fast 2D decode, Ethernet, serial, and industrial protocols, red illumination, India/Korea
VS20-SR10P2-2C00W	VS20 Smart Ethernet Sensor, adjustable focus, standard range, 1.0 MP, sensor toolset with fast 2D decode, Ethernet, serial, and industrial protocols, red illumination, Worldwide
VS20-SR10P2-3C00K	VS20 Smart Ethernet Sensor, adjustable focus, standard range, 1.0 MP, sensor toolset with fast 2D decode, Ethernet, serial, and industrial protocols, white illumination, India/Korea
VS20-SR10P2-3C00W	VS20 Smart Ethernet Sensor, adjustable focus, standard range, 1.0 MP, sensor toolset with fast 2D decode, Ethernet, serial, and industrial protocols, white illumination, Worldwide
VS20-SR10P3-2C00K	VS20 Smart Power over Ethernet Sensor, adjustable focus, standard range, 1.0 MP, sensor toolset with fast 2D decode, Ethernet with Power over Ethernet, serial, and industrial protocols, red illumination, India/Korea
VS20-SR10P3-2C00W	VS20 Smart Power over Ethernet Sensor, adjustable focus, standard range, 1.0 MP, sensor toolset with fast 2D decode, Ethernet, serial, and industrial protocols, red illumination, Worldwide
VS20-SR10P3-2C01K	VS20 Smart Power over Ethernet Sensor, adjustable focus, standard range, 1.0 MP, sensor toolset with fast 2D decode, Ethernet with Power over Ethernet, serial, and industrial protocols, red illumination, no external strobe, India/Korea
VS20-SR10P3-2C01W	VS20 Smart Power over Ethernet Sensor, adjustable focus, standard range, 1.0 MP, sensor toolset with fast 2D decode, Ethernet with Power over Ethernet, serial, and industrial protocols, red illumination, no external strobe, Worldwide
VS20-SR10P3-3C00K	VS20 Smart Power over Ethernet Sensor, adjustable focus, standard range, 1.0 MP, sensor toolset with fast 2D decode, Ethernet with Power over Ethernet, serial, and industrial protocols, white illumination, India/Korea
VS20-SR10P3-3C00W	VS20 Smart Power over Ethernet Sensor, adjustable focus, standard range, 1.0 MP, sensor toolset with fast 2D decode, Ethernet with Power over Ethernet, serial, and industrial protocols, white illumination, Worldwide

Table 1 Configurations (Continued)

Device	Description
VS20-SR10S2-2C00W	VS20 Smart Ethernet Sensor, adjustable focus, standard range, 1.0 MP, sensor toolset, Ethernet, serial, and industrial protocols, red illumination, Worldwide
VS20-SR10S2-3C00K	VS20 Smart Ethernet Sensor, adjustable focus, standard range, 1.0 MP, sensor toolset, Ethernet, serial, and industrial protocols, white illumination, India/Korea
VS20-SR10S2-3C00W	VS20 Smart Ethernet Sensor, adjustable focus, standard range, 1.0 MP, sensor toolset, Ethernet, serial, and industrial protocols, white illumination, Worldwide
VS20-SR10S3-2C00K	VS20 Smart Power over Ethernet Sensor, adjustable focus, standard range, 1.0 MP, sensor toolset, Ethernet with Power over Ethernet, serial, and industrial protocols, red illumination, India/Korea
VS20-SR10S3-2C00W	VS20 Smart Power over Ethernet Sensor, adjustable focus, standard range, 1.0 MP, sensor toolset, Ethernet with Power over Ethernet, serial, and industrial protocols, red illumination, Worldwide
VS20-SR10S3-3C00K	VS20 Smart Power over Ethernet Sensor, adjustable focus, standard range, 1.0 MP, sensor toolset, Ethernet with Power over Ethernet, serial, and industrial protocols, white illumination, India/Korea
VS20-SR10S3-3C00W	VS20 Smart Power over Ethernet Sensor, adjustable focus, standard range, 1.0 MP, sensor toolset, Ethernet with Power over Ethernet, serial, and industrial protocols, white illumination, Worldwide

Accessories

The device supports X-coded Ethernet and power, serial, and GPIO cables.

Part Number	Description
Cables	
CBL-ENT00500-M1200	Cable, Ethernet 5M, X-Coded M12 to RJ45, standard flex
CBL-ENT01500-M1200	Cable, Ethernet 15M, X-Coded M12 to RJ45, standard flex
CBL-PWR00500-M1200	Cable, power 5M, 12 Pin M12 to flying leads, standard flex
CBL-PWR01500-M1200	Cable, power 15M, 12 Pin M12 to flying leads, standard flex
Brackets	
BRKT-LMNT-C003	Compact Bracket
Mirror	
MIRR-DFLA-D001	Deflective Mirror
Power Supplies	
PWR-POE30W-0000	Power over Ethernet injector, 30W POE+, AC input
PWR-24V03A-0000	Power supply, 24VDC 3AMP, DIN rail mount
PWR-24V05A-0000	Power supply, 24VDC 5AMP, DIN rail mount

Installation

Mounting Instructions

Depending on the mounting orientation and configuration, you may need to use different screws. Use the guidance in this section to understand what screws are appropriate for your use case.

NOTE: If you are mounting the scanner directly onto the bracket, use 6.25 mm screws.

1. Refer to the dimensional drawings for mounting hole placements on the device.
2. Align the holes on the mounting surface with the mounting holes on the device.
3. Insert 6.25 mm screws into the mounting holes and tighten using a Torx T8 screwdriver. The recommended torque is 2 to 3 Nm / 17 to 26 lbf-in.

Figure 1 Compact Bracket (BRKT-LMNT-C003)

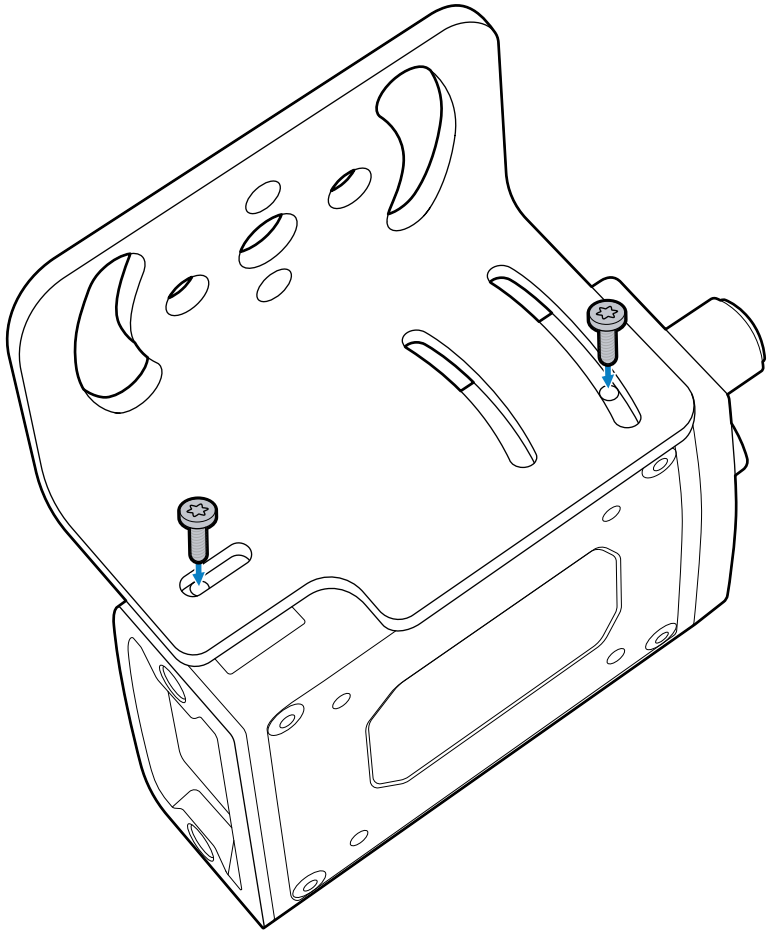

NOTE: The xS20 can be mounted on the compact bracket with various mounting orientations and angles. Use 8 mm screws and a Torx T10 screwdriver if you are mounting the compact on top of the deflective mirror using common mounting holes.

Figure 2 Compact Bracket with Deflective Mirror

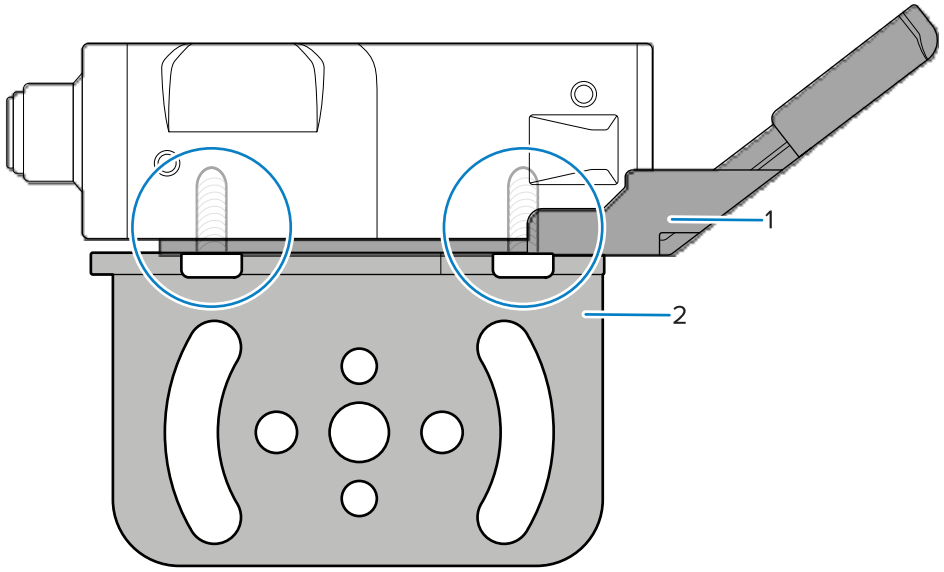

1	Deflective Mirror
2	Compact Bracket

Installing the Deflective Mirror

Use the deflective mirror to expand the field of view (FOV) and access occluded areas.

Required equipment:

- Deflective mirror
- 5 mm or 8 mm screws (depending on configuration)
- Torx T10 screwdriver

NOTE: Consider wearing gloves during the installation process to keep the mirror clean. Keep the protective layer on the mirror until the end of the installation to protect the mirror.

1. Mount the mirror bracket onto the device, aligning the mirror with the mounting holes.

   NOTE: If you are mounting the mirror directly onto the scanner, use 5 mm screws.

2. Insert the four 5 mm screws and hand-tighten them to mount the deflective mirror onto the device. Recommended torque: 2-3 Nm / 17-26 lbf-in.

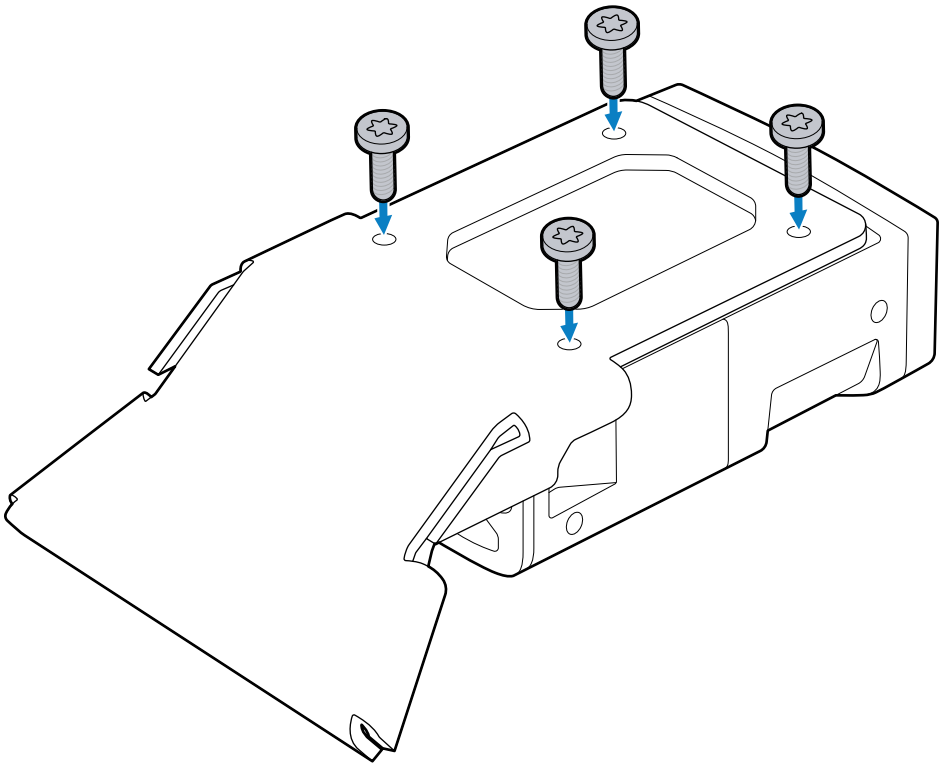

NOTE: If you are installing the mounting bracket on top of the deflective mirror, use 8 mm screws. The scanner's side mounting holes remain accessible when the mirror is mounted.

3. Remove the protective film from the mirror.

Compact Bracket Mounting Options

The compact bracket supports multiple mounting options.

NOTE: The xS20 compact bracket supports +/- 15° angle from the horizontal axis.

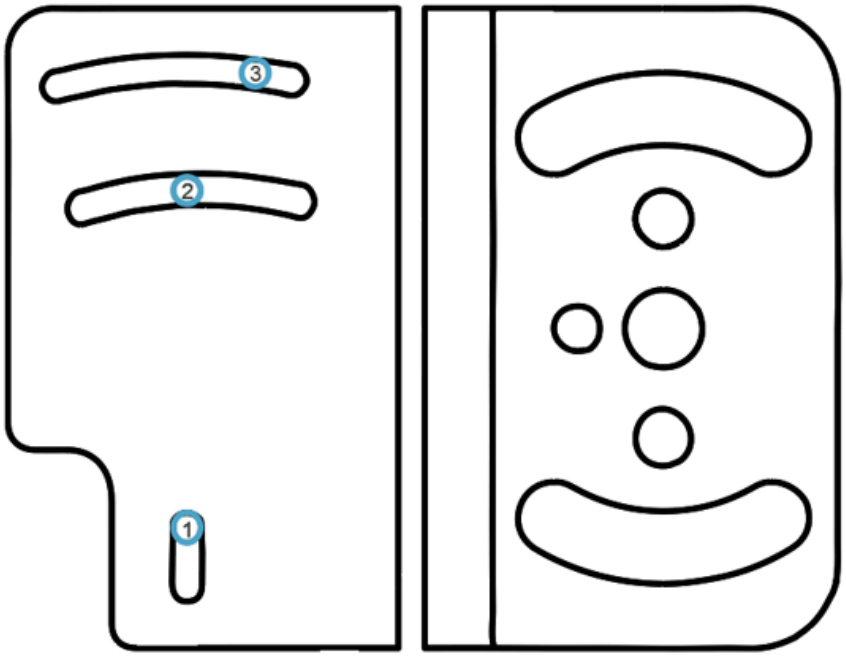

1 and 2	Bottom Mounting Option
1 and 3	Side Mounting Option

Mounting the Device Using the L-Bracket Accessory

This section illustrates the mounting orientations for the device using the L-bracket accessory (BRKT-LMNT-U000).

1. Use the mounting screws provided with the kit to attach the device to the bracket. The recommended Torque is 6.0 in-lbs.
2. Refer to the L-bracket mounting options outlined below.

Figure 3 Mounting Orientations

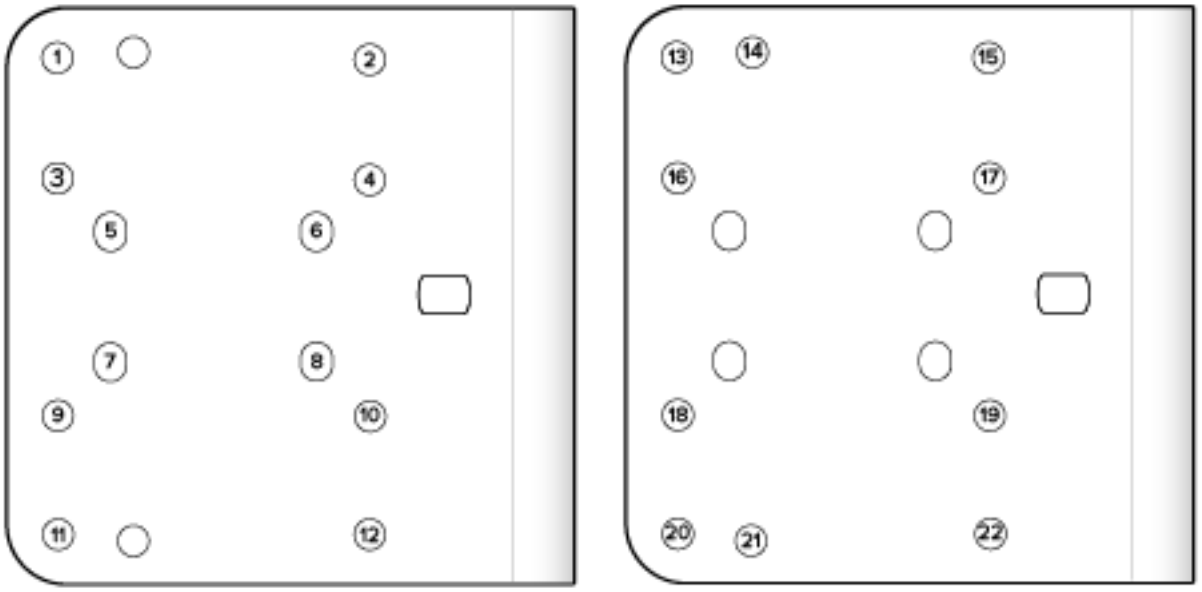

Bottom Mounting Options	Back/Side Mounting Options
1,2,9,10 or 3,4,11,12 for the FS10 (two options)	13 and 15, 16 and 17, 18 and 19, 20 and 22 Back Mounting Holes for the FS10 (four options)
1,2,9,10 or 3,4,11,12 for the xS20 (two options)	13 and 21 or 14 and 20 Side Mounting Holes for the xS20 (two options)

xS20 Connections

The xS20 supports power, serial, GPIO, and Ethernet.

Figure 4 xS20 Connections

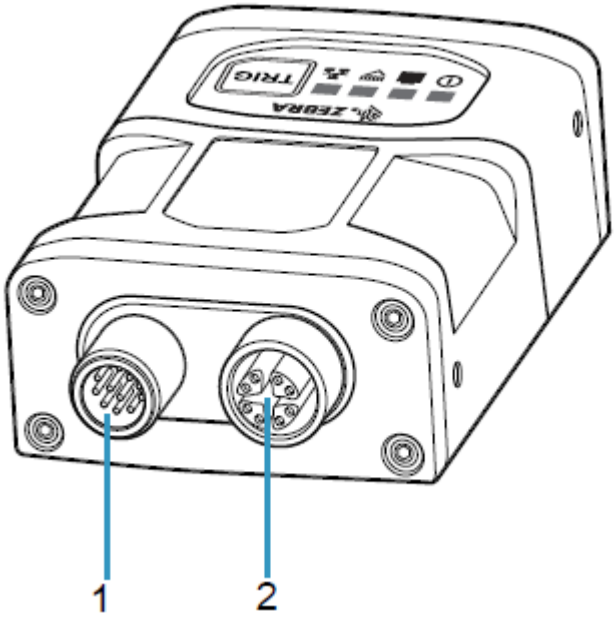

1	Power, Serial, and GPIO
2	X-Coded Ethernet

Torque Specification

Each connector on the devices requires a specific torque value.

To guarantee an IP65 or IP67 product specification, Zebra cables or connector thread safe covers must be torqued to the following specifications:

- Torque for USB-C cables: .2 to .5 Nm / 1.7 to 4 lbf-in.

NOTE: Connector covers are hand-tightened from the factory to allow for easy hand removal. The covers must be torqued at installation to guarantee an IP65 or IP67 specification if cables are not used.

Power Sources

FS/VS Smart Camera devices are powered through an external power supply or Power over Ethernet (PoE). A power priority scheme selects power from the external power supply over PoE to ensure a flexible power source is utilized. Changes to the power source may trigger a reboot.

12 Pin M12 Power Input

This power source input powers the xS20 only. No external peripherals are powered through the xS20. As a result, as long as the voltage and current are met in the specification table, the xS20 operates as expected. Circuitry in the xS20 prevents input current overload of the M12 connector and protects from reverse voltage and over and under voltage exceeding the input specifications.

No external peripherals are powered through the device. As a result, as long as the voltage and current listed in the specification table are met, the device operates as expected. Circuitry in the device prevents input current overload of the M12 connector and protects from reverse voltage and over and under voltage exceeding the input specifications.

Power Over Ethernet

The device requires a minimum 802.3af Class 2 (7W) PoE power source to operate properly.

Using the Device

Data Capture

The device has an LED aiming dot.

Figure 5 Aiming Dot



User Interface Label

The User Interface (UI) label uses LEDs to provide information on device state and feedback. The sensor PCB switch controls the device's trigger buttons, and the TRIG switch on the device acts as a trigger.

Figure 6 xS20 UI Labels

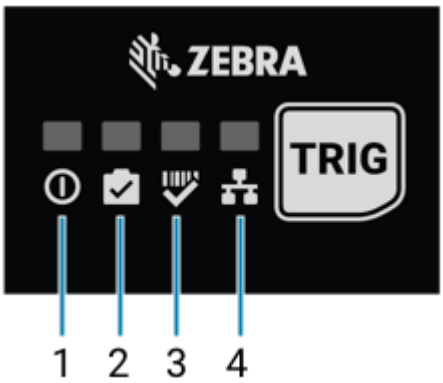

1	Power
2	Device Status
3	Decode
4	Ethernet

LED and Beeper Indications

The following table describes the device's LED and beeper indications during power-up, maintenance operations, and decoding events.

Table 2 LED and Beeper Indications

Event	Beeper	Power LED	Device Status LED	Decode LED
Power Up				
Power up with Low Power	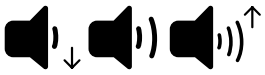 Low, Medium, High Tone	 Solid Red	-	-
Power up with Limited Power (USB or 15W PoE)	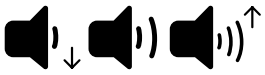 Low, Medium, High Tone	 Green (Slow Blink)	-	-
Power up with Full Power (24V or 30W PoE)	 Low, Medium, High Tone	 Solid Green	-	-
Job Error	 Low, Low Tone	 Solid Green	 Solid Red	-
Device Maintenance				
Factory Reset	 Medium, Medium Tone	 Solid Green	-	-
Firmware Operations				
Firmware Update Start	-	 Solid Green	 Continuous Red Flash (2hz)	-
Firmware Update Success	-	 Solid Green	-	-

Table 2 LED and Beeper Indications (Continued)

Event	Beeper	Power LED	Device Status LED	Decode LED
Firmware Update Fail	 Low Tone	 Solid Green	 Continuous Red Flash (5hz)	-
Autotune Operations				
AutoTune Start	 Medium Tone	 Solid Green	-	 Continuous Green (2Hz)
AutoTune Success	 High Tone	 Solid Green	-	 Solid Green
AutoTune Fail	 Low Tone	 Solid Green	-	 Solid Red
Decode				
Barcode Decode Start	-	 Solid Green	 Solid Amber	-
Barcode Decode Success	 Medium Tone	 Solid Green	-	-
Barcode Decode Failure	-	 Solid Green	-	-
Parameter Programming				
Parameter Entry Accepted	 High, Low, High, Low Tone	-	 Solid Green	-

Table 2 LED and Beeper Indications (Continued)

Event	Beeper	Power LED	Device Status LED	Decode LED
Parameter Number Entry Expecting Barcodes	High, Low Tone	-	Solid Green	-
Parameter Entry Error	Low, High Tone	-	Solid Green	-

General Purpose Input and Outputs

They are all optically coupled to provide electrical isolation and wiring flexibility.

Figure 7 Opto-Isolated Inputs

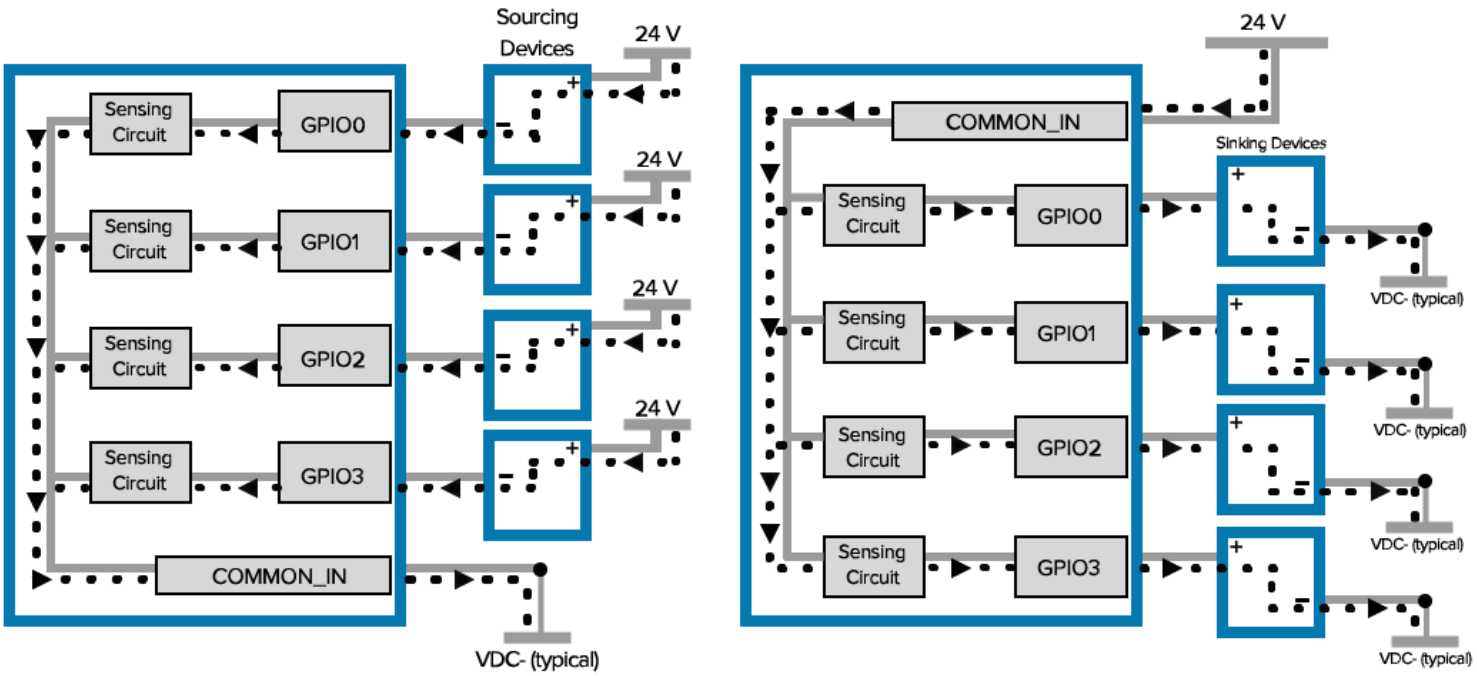

Figure 8 Opto-Isolated Outputs

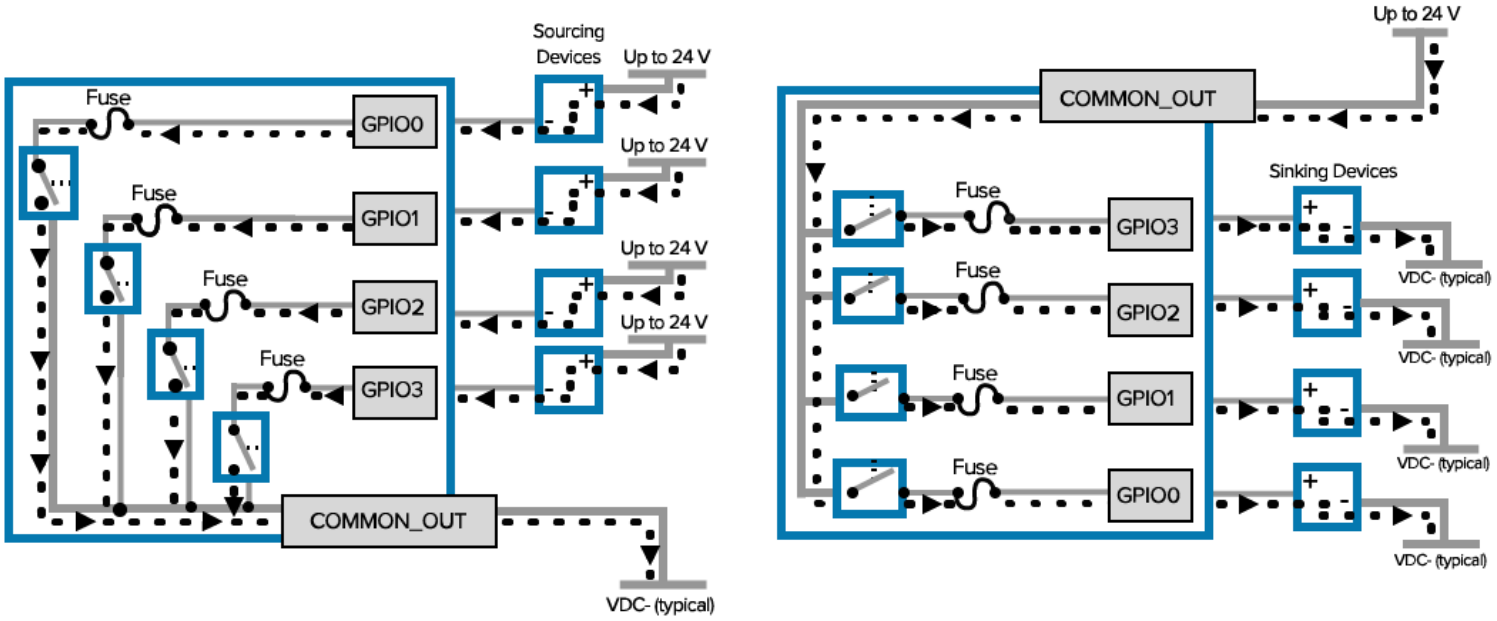

GPIO Summary

The following table provides GPIO details such as connector, input mode, and output mode.

Table 3 xS20 I/O Summary

IO	Hardware	DB15 Pin	Color	Isolated	Sink PNP	Source NPN	Current
Input 0	Opto	10	Orange	Yes	Yes	Yes	[1] 10mA
Input 1	Opto	4	White/ Brown	Yes	Yes	Yes	[1] 10mA
Output 0	Opto	11	Blue	Yes	Yes	Yes	100mA
Output 1	Opto	1	Yellow	Yes	Yes	Yes	100mA
Com_IN	-	6	White/ Violet	Yes	Yes	Yes	-
Com_Out	-	9	Green	Yes	Yes	Yes	-

NOTE: [1] Digital outputs consume power and reduce the power budget available for illumination. It is recommended to disable unused output when using PoE.

Optically Coupled GPIO

Optocoupled GPIO have the advantage of being electrically isolated from the rest of the vision system and require external reference through the COMMON_IN and COMMON_OUT wires. The termination

of COMMON_IN and COMMON_OUT to an external voltage or ground determines if the input or output is Sinking (also known as NPN) type or Sourcing (also known as PNP) type.

The output GPIO performs similarly to switches connecting the GPIO pin to COMMON_OUT. When disabled, the GPIO pin is disconnected from COMMON_OUT and allowed to float. As a result, optocoupled outputs turn on relatively quickly, while the turn off time is dependent upon how quickly the connected load dissipates charge.

Figure 9 Output Mode Equivalent Circuit Diagram for NPN and PNP Mode

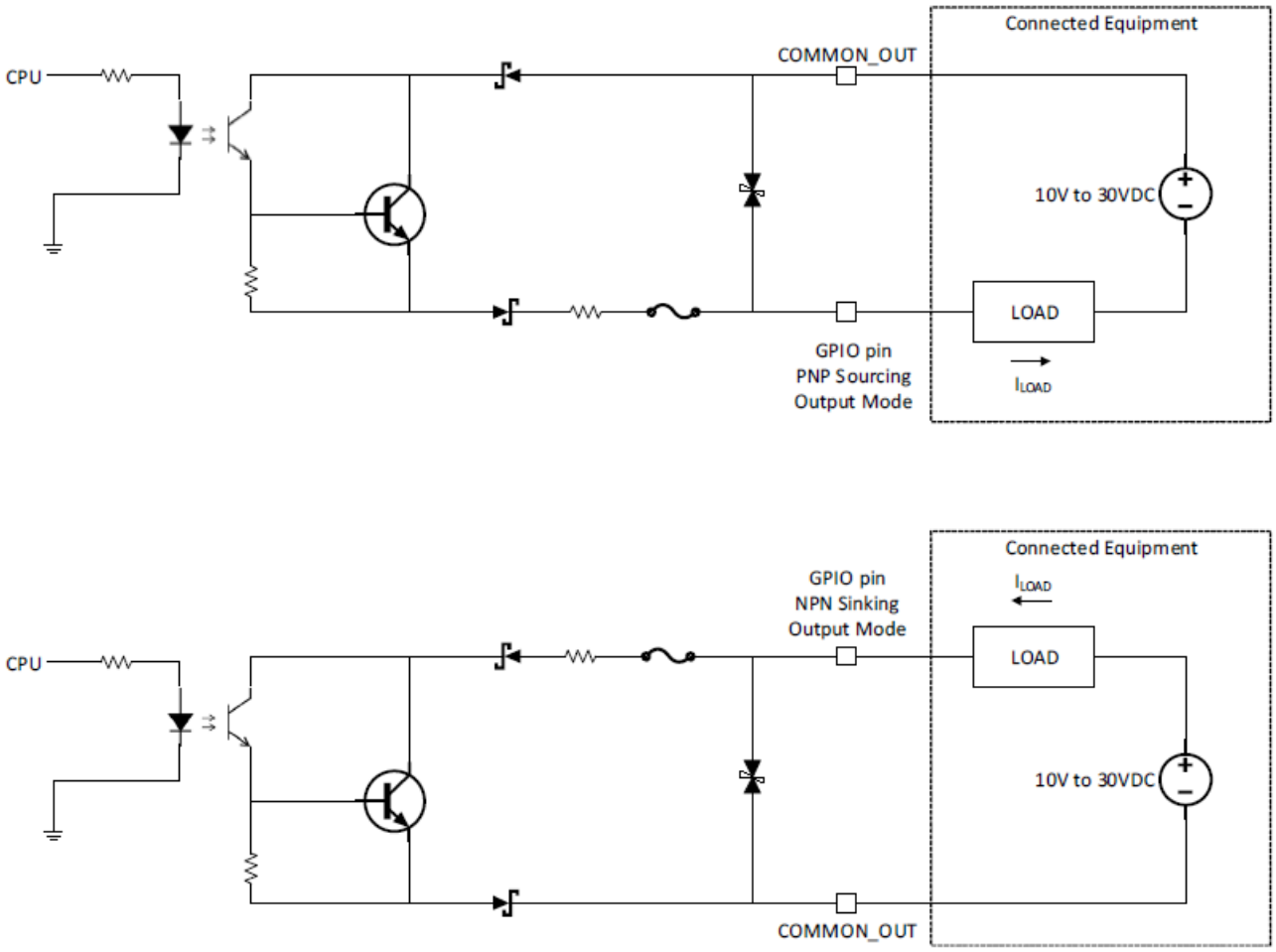

Optocoupled inputs are enabled when voltage is applied across the GPIO pin and COMMON_IN.

Figure 10 Input Mode Equivalent Circuit Diagram for NPN and PNP Mode

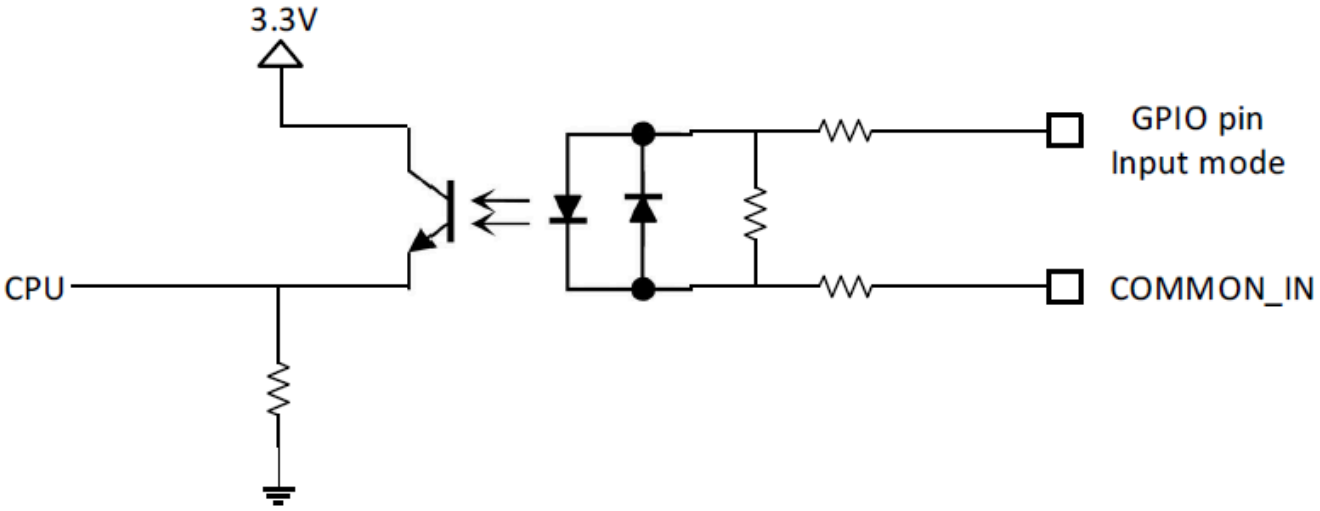

Optocoupled GPIO can be operated in a non-isolated fashion by terminating COMMON_IN and COMMON_OUT to the DC_IN or GND wires used to power the device.

The following table provides a useful reference for such connections.

Table 4 Connection References

Wire	Termination	Configuration
COMMON_IN	GND	Sinking Input (PNP)
COMMON_IN	DC_IN	Sourcing Output (NPN)
COMMON_OUT	GND	Sinking Input (NPN)
COMMON_OUT	DC_IN	Sourcing Output (PNP)

While it is possible to configure inputs and outputs as the same type, this is not recommended as inputs and outputs must be of opposite type on the device and auxiliary equipment to be compatible. All optocoupled GPIO share the COMMON_IN for inputs and COMMON_OUT for outputs. Therefore, all inputs must be of the same type and all outputs must be of the same type. For example, it is not possible to simultaneously configure sinking output on OUT0 and sourcing output on OUT1.

NOTE: Refer to the documentation of the connected auxiliary equipment to ensure a compatible configuration, and remember to leave unused GPIO in a disabled state.

Optocoupled outputs are individually fused to protect against damage from short circuit or overload events. Since no power is consumed from the vision system, optocoupled GPIO are always available regardless of power source and have no impact on power budgeting.

xS20 GPIO Wiring Diagrams

The following diagram shows an xS20 device with two LEDs on outputs indicating job outcome and input trigger from a proximity sensor. The GPIO input is a current sink. The outputs are set as a current source. The power source is a PLC 24VDC PSU, and the GPIO functions are opto-isolated.

Figure 11 xS20 GPIO Input as Current Sink and Outputs as Current Sourc

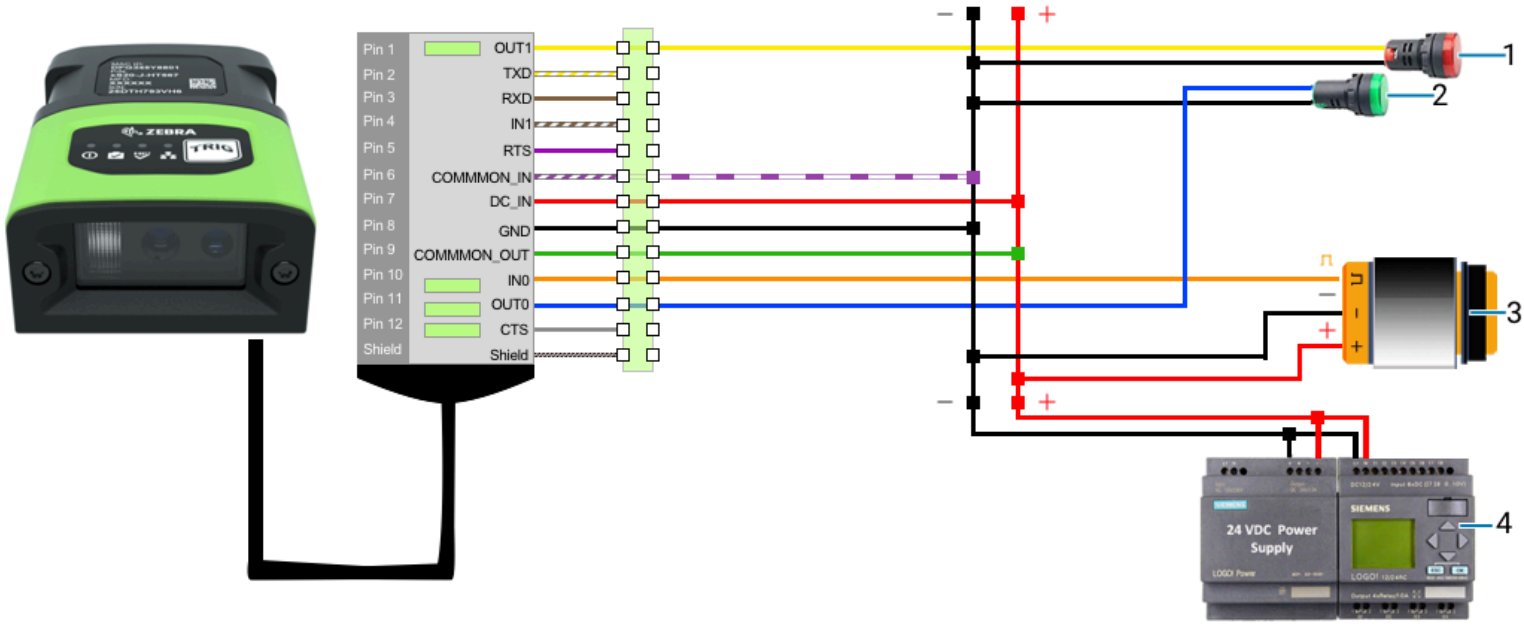

1	Job Fail
2	Job Pass
3	Proximity Sensor
4	Power Supply

The following diagram shows an xS20 device with two LEDs on outputs indicating job outcome and input trigger from a proximity sensor. The GPIO input is a current source and the outputs are set as a current sink. The power source is a PLC 24VDC PSU, and the GPIO functions are opto-isolated.

Figure 12 xS20 GPIO Input as Current Source and Outputs as Current Sink

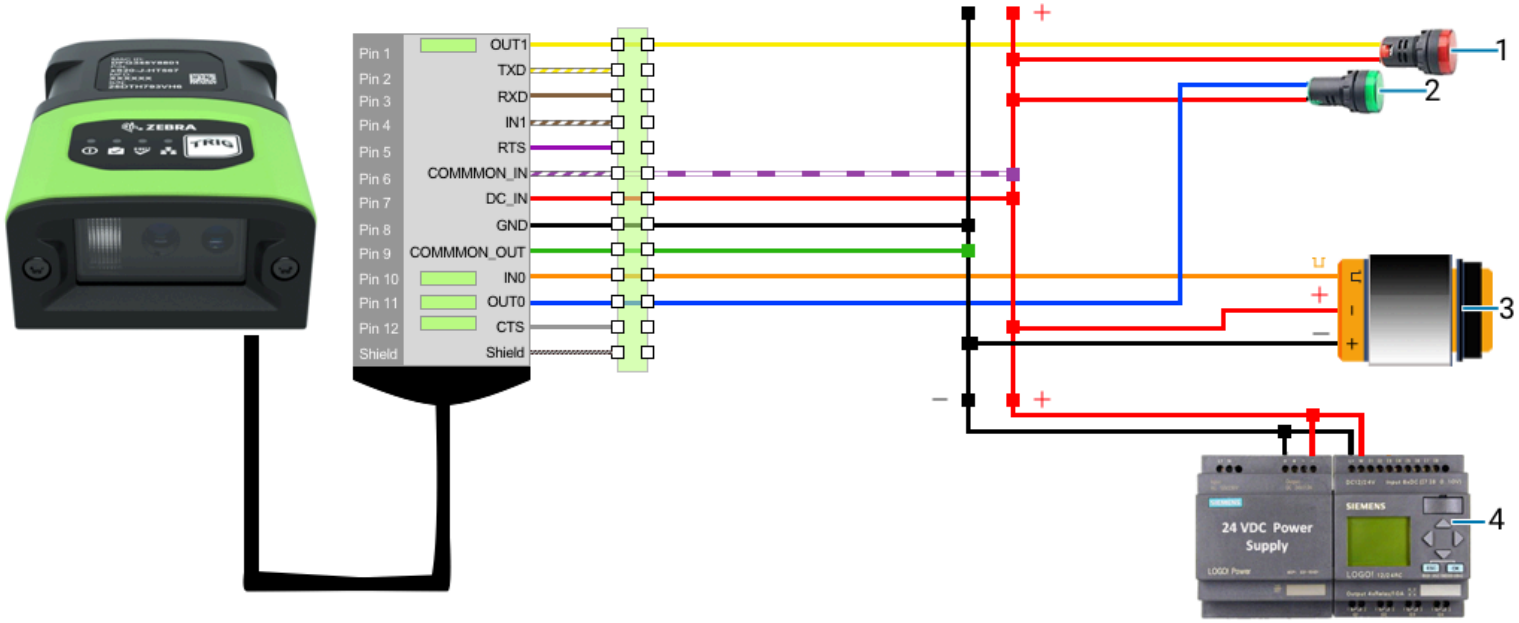

1	Job Fail
2	Job Pass
3	Proximity Sensor
4	Power Supply

Thermal Management

Sophisticated algorithms keep the operation of the system within acceptable thermal parameters to ensure reliable operation over the device's lifetime.

Temperature is actively monitored at critical points within the system. If the device exceeds a recommended limit, the system response may include stopping active jobs. If this condition occurs, consider mitigation strategies to avoid overheating. It is required to power cycle the device to resume normal operation if one of these strategies is employed.

Mitigate the risk of overheating by:

- Avoiding continuous trigger mode
- Lowering trigger rate
- Using external illumination
- Operating in a cooler environment
- Actively cooling with a fan

For optimal performance, ensure that the device does not exceed the recommended operating ranges listed below:

Table 5 Operating Temperature

Temperature	Operating Range
Ambient Temperature	0°C to 45°C (non-POE, duty cycle-dependent)

NOTE: If temperatures exceed the recommended operating range, additional heat-sinking strategies such as mounting to a metal infrastructure or forced convection via an external fan may be necessary. The Zebra Universal Mounting Bracket (BRKT-LMNT-U000) provides multiple options to mount to a metal infrastructure.

Grounding for Electro-Magnetic Compliance and ESD Safe

The system is designed with a rugged metal chassis connected internally to ground for robust Electro-Magnetic Compliance (EMC) and ESD Safe operation. Do not mount to any conductive object, body, structure, or mechanism that may become connected to line voltage or a voltage potential other than Protected Earth Ground. Chassis grounding via cable shield, mounting screws, or low inductance ground strap to a local Protected Earth Ground is acceptable.

NOTE: There is no galvanic connection to Earth Ground when the device is powered over an unshielded Ethernet cable. In this scenario, grounding to local Earth Ground through another cable shield, mounting screw, or ground strap is required for ESD Safe compliance and best practice for EMC.

Maintenance

To maintain Zebra devices, avoid harmful chemicals such as acetone, ammonia solutions, benzene, bleach, and trichloroethylene, as they damage plastics. Use approved cleaning agents such as pre-moistened wipes and 70% isopropyl alcohol. Use a dampened soft cloth for routine cleaning to avoid liquid pooling and direct spraying into the scanner exit window. Clean the window with lens tissue and dry it with a soft cloth. For connectors, use a cotton-tipped applicator dipped in isopropyl alcohol, ensuring no residue remains, and follow with a dry applicator to remove debris.

Known Harmful Ingredients

The following chemicals are known to damage the plastics on Zebra devices and should not come in contact with the device:

- Acetone
- Ammonia solutions
- Aqueous or alcoholic alkaline solutions
- Aromatic and chlorinated hydrocarbons
- Benzene
- Bleach
- Carbolic acid
- Compounds of amines or ammonia
- Ethanolamine
- Ethers
- Ketones
- TB-lysoform
- Toluene
- Trichloroethylene

Approved Cleaning Agents

The following cleaning agents are approved for cleaning the plastics on Zebra devices:

- Pre-moistened wipes

- Isopropyl alcohol 70%

Tolerable Industrial Fluids and Chemicals

The following industrial fluids and chemicals were evaluated and deemed tolerable for Zebra devices.

NOTE: Not all fluid variants and brands have been tested.

- Motor/Engine Oil
- Automatic Transmission Fluid (ATF)
- Continuously Variable Transmission Fluid (CVT)
- Industrial De-Greaser (Engine Brite Heavy Duty)

Cleaning the Device

Routinely cleaning the exit window is required. A dirty window may affect scanning accuracy. Do not allow any abrasive material to touch the window.

1. Dampen a soft cloth with one of the approved cleaning agents listed above, or use pre-moistened wipes.
2. Gently wipe all surfaces, including the front, back, sides, top, and bottom. Never apply the liquid directly to the device. Be careful not to let liquid pool around the scanner window, trigger, cable connector, or any other area on the device.
3. Clean the trigger area by carefully wiping the surface to prevent the label from lifting from the device.
4. Do not spray water or other cleaning liquids directly into the exit window.
5. Wipe the scanner exit window with lens tissue or other material suitable for cleaning optical material, such as eyeglasses.
6. Immediately dry the scanner window after cleaning with a soft, non-abrasive cloth to prevent streaking.
7. Allow the unit to air dry before use.
8. To clean the device connectors:
    a. Dip the cotton portion of a cotton-tipped applicator in isopropyl alcohol.
    b. Rub the cotton portion of the cotton-tipped applicator back and forth across the device's connector at least thrice, leaving no cotton residue.
    c. Use the cotton-tipped applicator dipped in alcohol to remove grease and dirt near the connector area.
    d. Do not leave any cotton residue on the connectors.

Troubleshooting

Communicating With the Device

Pinging via IP and pinging via hostname are two common strategies that you can use to communicate with the device.

Pinging the Device via IP

Users can ping the device by providing the IP address via command prompt or powershell to communicate with the device.

To ping the device via IP address:

1. Open a command prompt or powershell.
2. Enter the following command: ping <ip address>
3. Check to see if the device responds or fails to respond.

   Example: Pinging 192.168.4.100 with 32 bytes of data:

   - Reply from 192.168.4.100: bytes= 32 time=1ms TTL=64
   - Reply from 192.168.4.100: bytes= 32 time=1ms TTL=64
   - Reply from 192.168.4.100: bytes= 32 time=1ms TTL=64

Device Discovery Troubleshooting Methods

Two common solutions to enable the device to re-connect via device discovery are performing a factory reset on the device and power cycling the device.

Factory Reset the Device

Perform a factory reset on the device using the hardware buttons.

1. Disconnect all power sources.
2. Press and hold the TRIG button on the device.
3. Connect to a power source.

4. Continue to hold the TRIG button.

   After 20 seconds, the device's Power LED turns yellow to green.

5. Release the TRIG button.

Power Cycling the Device

Power cycling the device can help in troubleshooting potential network discoverability issues.

1. Remove all cables to ensure no power is being directed to the device.
2. Reinsert a power source and allow the device approximately one minute to boot up.
3. Re-attempt to:
   - Discover a device in Zebra Aurora Focus by restarting the application and clicking **View Devices**.
   - View a device in the Windows Network.
   - Access a device using the Zebra Web HMI.

If failure persists, repeat the steps above for all of the connection types being used with the device, including:

- Ethernet directly to the PC.
- Ethernet connection to a network via switch or hub.

Technical Reference

xS20 Specifications

The following table lists the physical characteristics, user environment, and regulatory specifications of the xS20.

Specification	Description
Physical Characteristics	
Dimensions	1.1 in. H x 2.15 in. W x 3.71 D 28.3 mm H x 54.6 mm W x 94.3 mm D
Weight	2000 g/7.1 oz
Power	10 to 30 VDC external power supply, 7W max at 24V Class 2 PoE, 7W
Configurable IO	(4) Four opto-isolated GPIO: 2 dedicated inputs(IN0/IN1), 2 dedicated outputs (OUT0/ OUT1)
Communication Protocols	Ethernet/IP, PROFINET, Modbus TCP, TCP/IP
Performance Characteristics	
Image Sensor	Monochrome: 1.0 MP (1280x800 pixels) CMOS Sensor with Global Shutter and 3.0 um pixel size
Acquisition Rate	60 frames/second
Aimer	617nm red LED aim dot
Illumination	(2) 2700K (Color Temperature) White LEDs or (2) 660nm red LEDs **NOTE:** LED color depends on the model you are using.
Imager Field of View	35°(H) x 26°(V)
User Environment	
Operating Temperature	0°C to 45°C (32°F to 113°F) (duty cycle-dependent)
Storage Temperature	-40° to 70°C (-40°F to 158°F)

Specification	Description
Humidity	5 % to 90 % RH (Non-Condensing)
Vibration Resistance	EN 60068-2-6, 14 mm @ 2 to 10 Hz, 1.5 mm @ 13 to 55 Hz; 2 g @ 70 to 500 Hz; 2 hours on each axis
Shock Resistance	EN 60068-2-27, 30g; 11 ms; 3 shocks on each axis
Sealing	IP65 and IP67
Light Immunity	Product operates in: Incandescent 450 ft candles, Sunlight <6000 ft candles, Florescent 450 ft candles, Mercury Vapor 450 ft candles, Sodium Vapor 450 ft candles, LED 450 ft candles
Electrostatic Discharge	±15KV Air, ±8KV Direct/Indirect Contact
Regulatory Approvals	
Environmental	EN 50581:2012 EN IEC 63000:2018
Electric Safety	IEC 62368-1 (Ed.2) EN 62368-1:2014/A11:2017
EMI/EMS	EN 55032:2015/A11: 2020 EN 55035:2017/A11: 2020 EN 61000-3-2: 2014 EN 61000-3-3: 2013 EN 61000-6-2: 2005 & 2019 FCC 47 CFR Part 15, Subpart B Canada ICES-003, Issue 7
EU Declaration of Conformity	2014/30/EU; 2014/35/EU; 2011/65/EU Refer to the Declaration of Conformity (DoC) for details of compliance with the current standards. The DoC is available at: zebra.com/doc

xS20 Dimensional Drawings

Figure 13 xS20 Dimensional Drawings

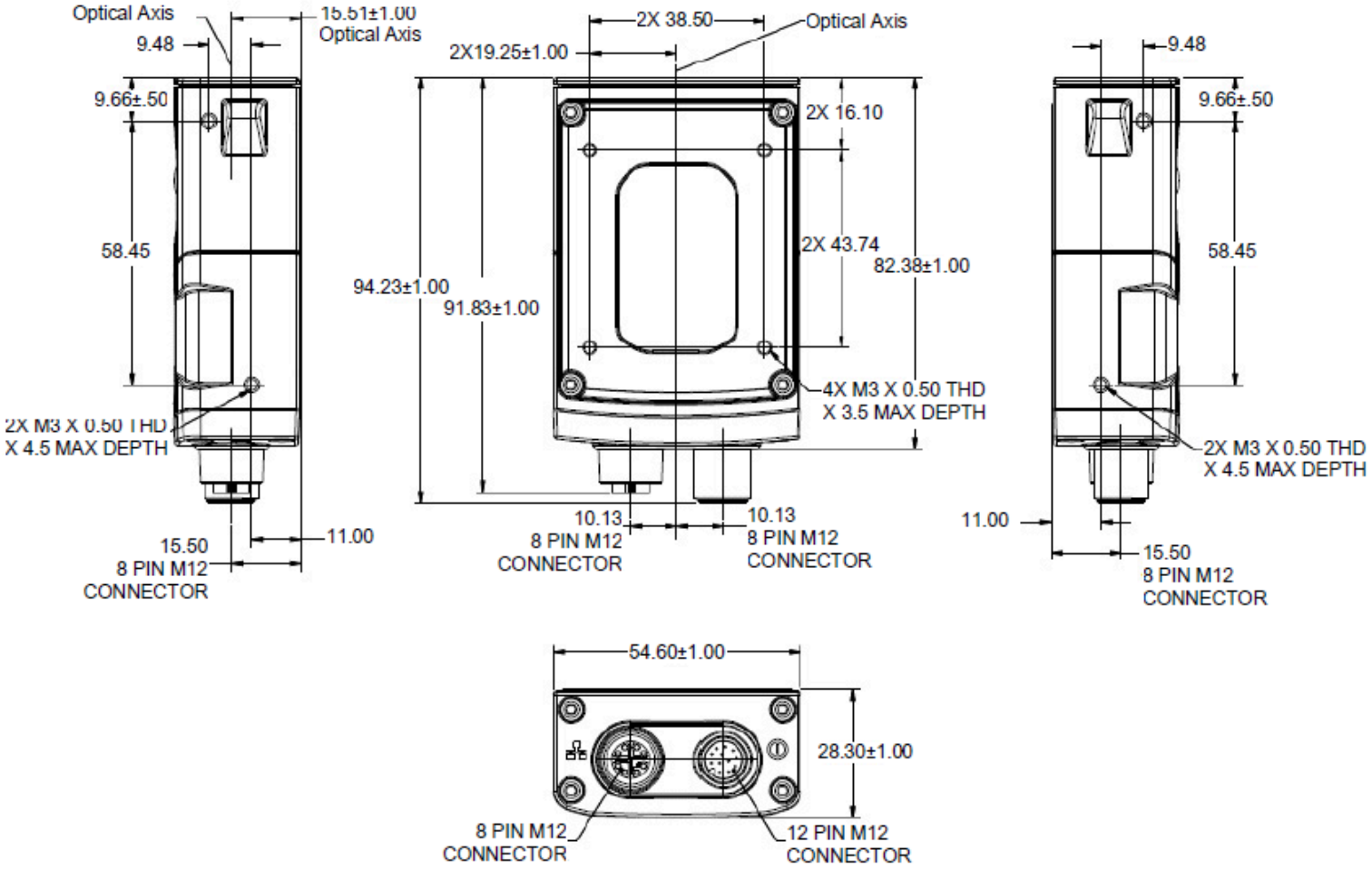

Deflective Mirror Dimensions

View the dimensional drawings in this section to understand the mirror's footprint when installed in an industrial environment.

Figure 14 xS20 Deflective Mirror Dimensions - Top View

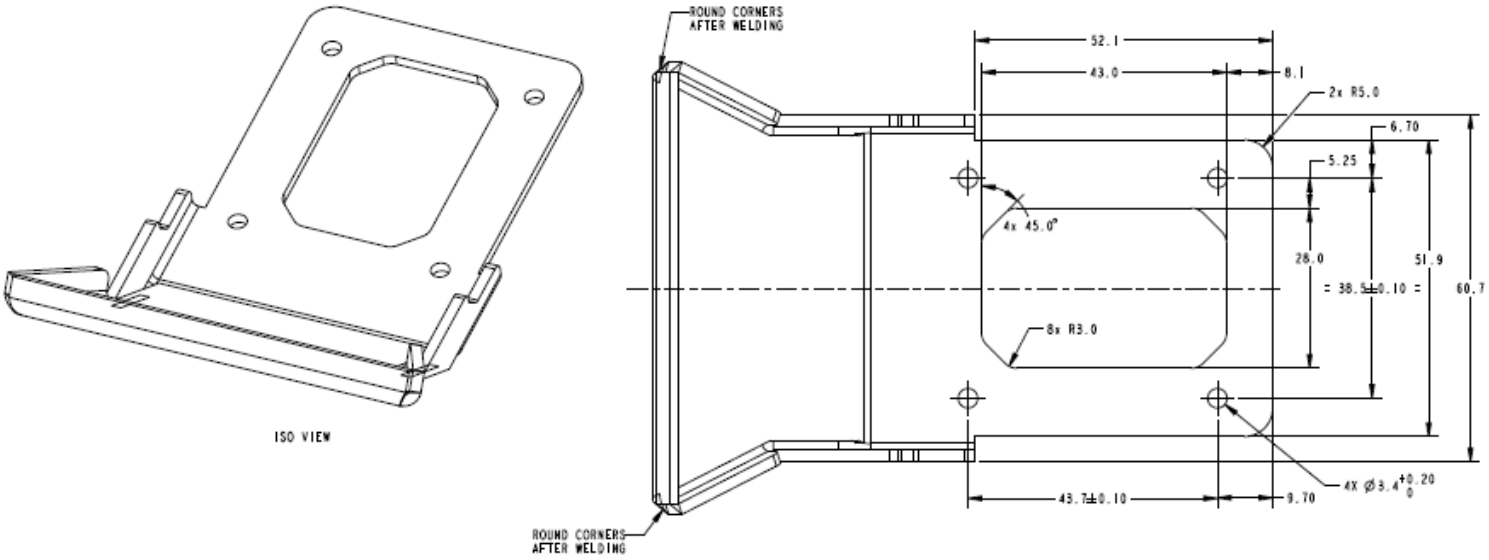

Figure 15 xS20 Deflective Mirror Dimensions - Side View

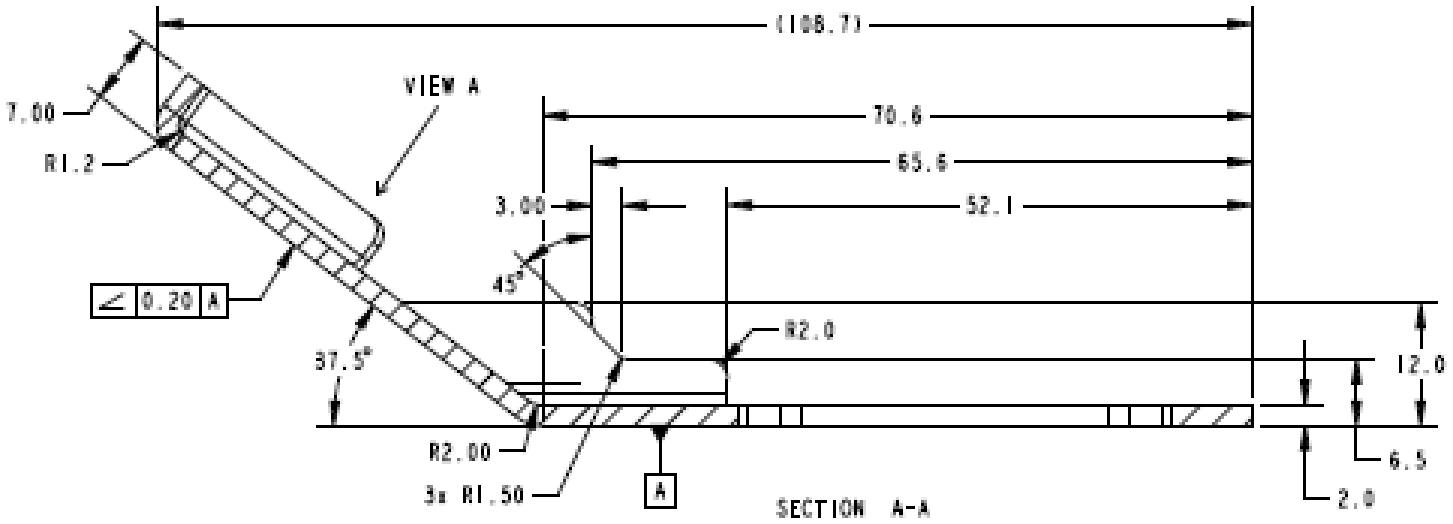

Cable Pin Outs

Power and IO Connector

Figure 16 Power and I/O Connector - 12 Pin Listing

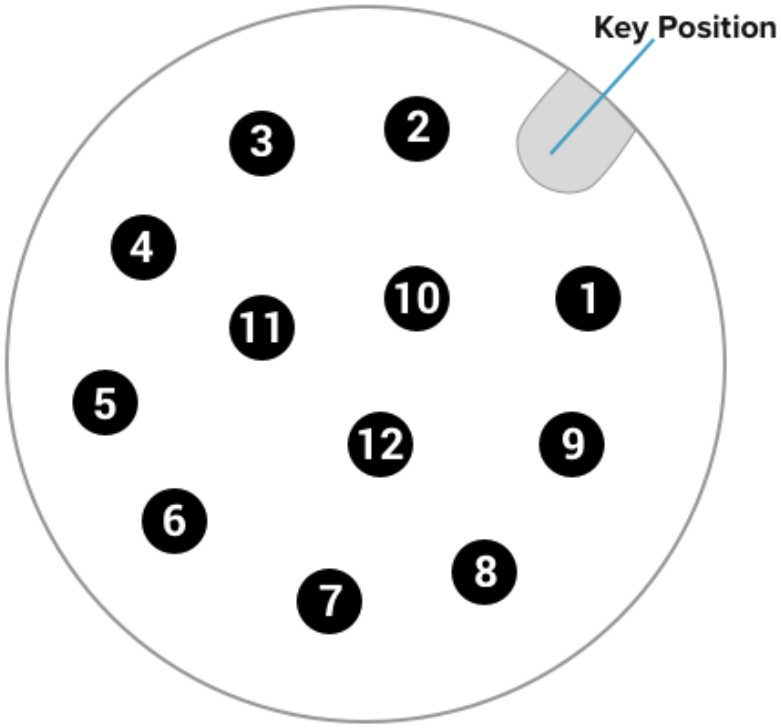

Table 6 Power and I/O Connector - 12 Pin Listing

Pin	Color	Description
1	Yellow	OUT1
2	White/Yellow	TXD
3	Brown	RXD
4	White/Brown	IN1
5	Violet	RTS
6	White/Violet	COMMON_IN
7	Red	DC_IN
8	Black	GND
9	Green	COMMON_OUT
10	Orange	IN0
11	Blue	OUT0

Table 6 Power and I/O Connector - 12 Pin Listing (Continued)

Pin	Color	Description
12	Grey	CTS
SHELL	Bare	SHIELD

Using Autofocus Barcodes

Use calibration barcodes to set the device's focus settings automatically.

NOTE: This process only adjusts the focus setting on the device and does not adjust exposure or gain.

Bring one of the following calibration barcodes into the device field of view:

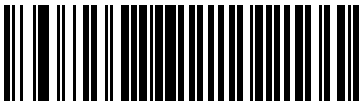

5s delay

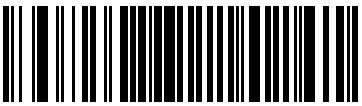

8s delay

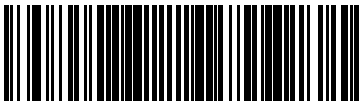

13s delay

1. Read one of the autofocus barcodes to start the focus-tuning process based on the selected delay.

   NOTE: Observe the status LED flash every 500ms during the delay, providing time to bring the test barcode into the field of view to tune the focus on it.

2. During this delay, bring the desired test barcode into the field of view for the autofocus process to use as a reference. It is recommended to tune the focus of the device with a barcode type that is commonly decoded in your use case.

   NOTE: Do not use the calibration barcode as the test barcode to calibrate focus against.

3. After the delay, the autofocus process starts and continues for 5-15 seconds.
4. Listen for the confirmation beeper sequence indicating the focus calibration process is complete.

Using Parameter Barcodes

Set feature values by scanning a single barcode or a short barcode sequence. The settings are stored in non-volatile memory and are preserved even when the scanner powers down.

NOTE: Most computer monitors allow scanning barcodes directly on the screen. When scanning from the screen, be sure to set the document magnification to a level where you can see the barcode clearly, and bars and/or spaces do not merge.

If you are not using a USB cable, select a host type after the power-up beeps sound. This is only necessary upon initial power-up when connecting to a new host.

HID Keyboard Keystroke Delay

Parameter #65705

Scan a barcode to select a predetermined keystroke delay



Predefined Keystroke Delay 0s

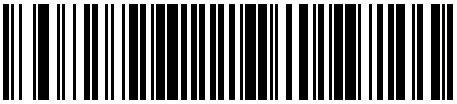

Predefined Keystroke Delay 5ms

HID Keyboard Special Keystroke Delay

Parameter #65706

Scan a barcode to select a predefined special keystroke delay.



Predefined Special Keystroke Delay 0s



Predefined Special Keystroke Delay 5ms

HID CDC Serial

Parameter #66934

Scan a barcode to enable to disable CDC serial.



Enable CDC Serial (Disable HID)

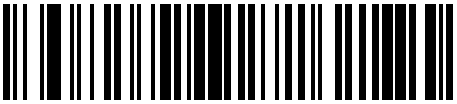

Disable CDC Serial

HID CDC Serial Results

Parameter #66933

Scan a barcode to enable or disable HID CDC Serial results on the device.



Enable CDC Serial Results



Disable CDC Serial Results

USB Power Configuration

Parameter #65079

Scan a barcode to enable or disable Unrestricted USB-A power.

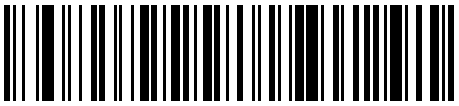

Enable Unrestricted USB A-Power

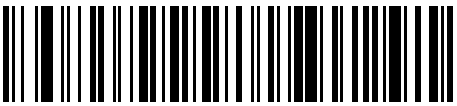

Disable Unrestricted USB A-Power

Input/Output (IO) Interface Configuration

TCP Result Output

Parameter #66930

Scan a barcode to enable or disable an IO interface.



Enable TCP Result Output

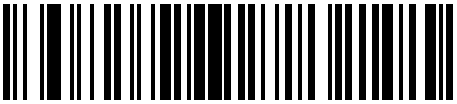

Disable TCP Result Output

TCP Result Control

Parameter #66915



Enable TCP Result Control

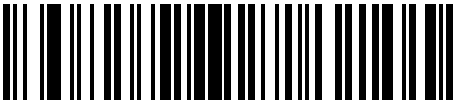

Disable TCP Result Control

RS232 Result Output

Parameter #66931



Enable RS232 Result Output



Disable RS232 Result Output

RS232 Result Control

Parameter #66932



Enable RS232 Result Control



Disable RS232 Result Control

Barcode Configuration Mode

Parameter #69035

Scan a barcode to enter or exit barcode configuration mode.

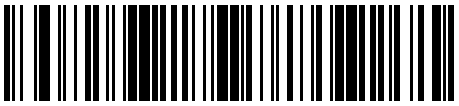

Enter Parameter Barcode Configuration Mode



Exit Parameter Barcode Configuration Mode

Change Active Job Slot Number

Parameter #69053

Scan a barcode to change the active job slot to the specified number.

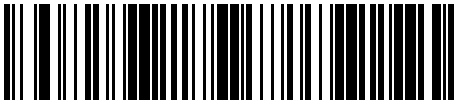

Change Active Job Slot to Number 1



Change Active Job Slot to Number 2

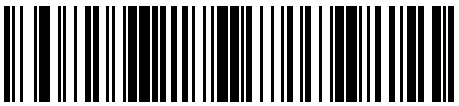

Change Active Job Slot to Number 3

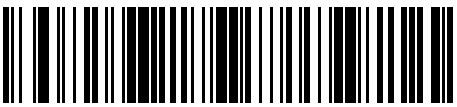

Change Active Job Slot to Number 4

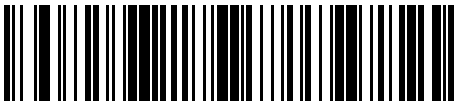

Change Active Job Slot to Number 5

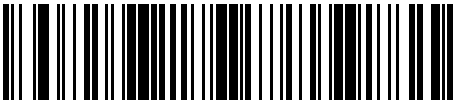

Change Active Job Slot to Number 6

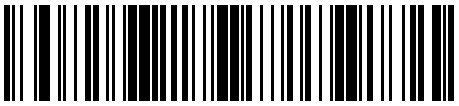

Change Active Job Slot to Number 7

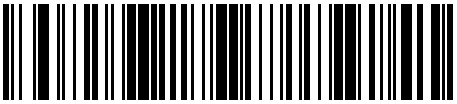

Change Active Job Slot to Number 8

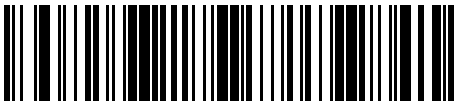

Change Active Job Slot to Number 9

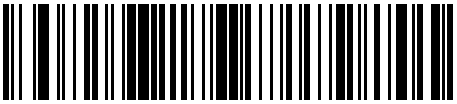

Change Active Job Slot to Number 10

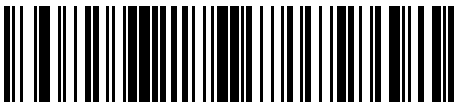

Change Active Job Slot to Number 11



Change Active Job Slot to Number 12

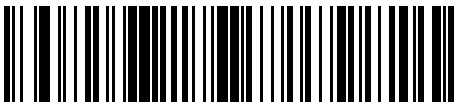

Change Active Job Slot to Number 13



Change Active Job Slot to Number 14

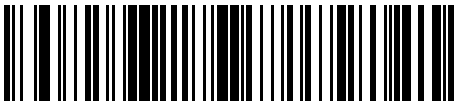

Change Active Job Slot to Number 15

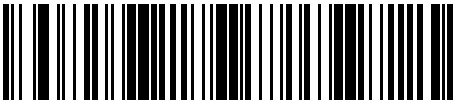

Change Active Job Slot to Number 16

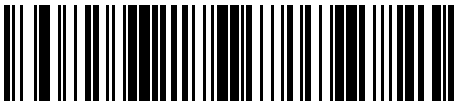

Change Active Job Slot to Number 17

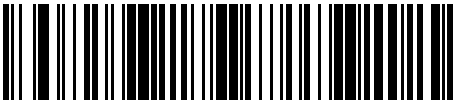

Change Active Job Slot to Number 18

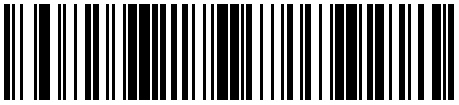

Change Active Job Slot to Number 19

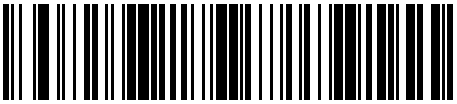

Change Active Job Slot to Number 20

Change Startup Job Slot Number

Parameter #69054

Scan a barcode to change the startup job slot to the specified number.

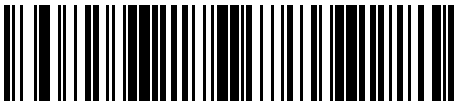

Change Startup Job to Slot Number 1

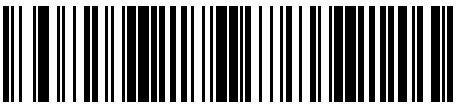

Change Startup Job to Slot Number 2

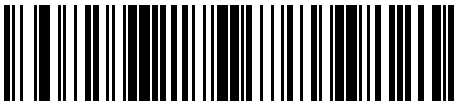

Change Startup Job to Slot Number 3

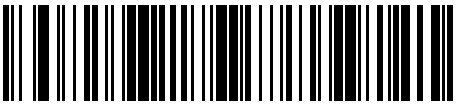

Change Startup Job to Slot Number 4

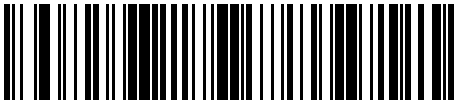

Change Startup Job to Slot Number 5

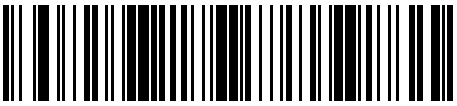

Change Startup Job to Slot Number 6

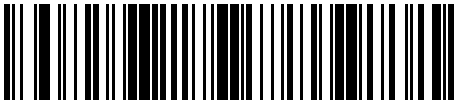

Change Startup Job to Slot Number 7

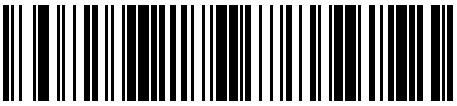

Change Startup Job to Slot Number 8

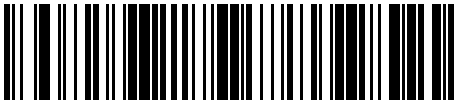

Change Startup Job to Slot Number 9

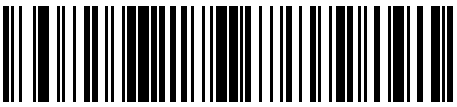

Change Startup Job to Slot Number 10

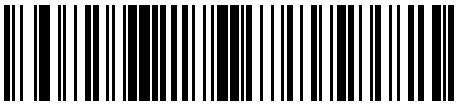

Change Startup Job to Slot Number 11

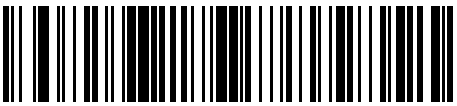

Change Startup Job to Slot Number 12

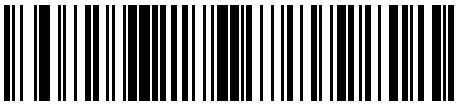

Change Startup Job to Slot Number 13

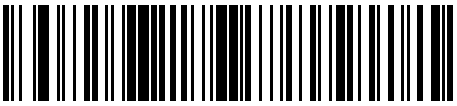

Change Startup Job to Slot Number 14

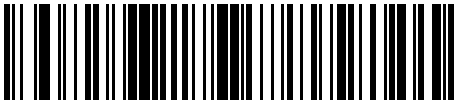

Change Startup Job to Slot Number 15

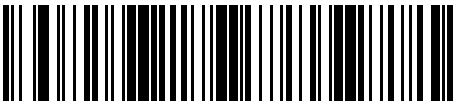

Change Startup Job to Slot Number 16

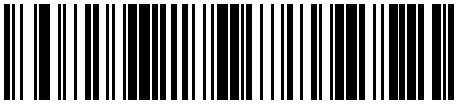

Change Startup Job to Slot Number 17

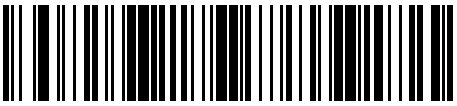

Change Startup Job to Slot Number 18

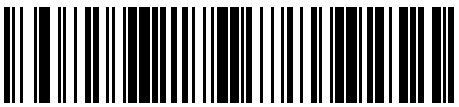

Change Startup Job to Slot Number 19

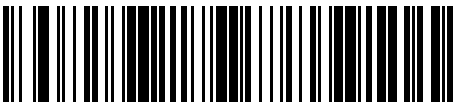

Change Startup Job to Slot Number 20

Reboot Device

Parameter #69030

Scan the following barcode to reboot the device.

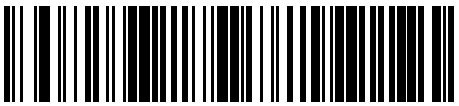

Reboot the Device

Restart Core Services

Parameter #69031

Scan the barcode to restart core services.



Restart Core Services

Reading Diagrams

The following diagrams provide reading distances based on ECC 200 and Code128 barcode reads.

Reading Distances

NOTE: Offset values for window distance when using the deflective mirror:

- FS10: -14 mm
- xS20: -16 mm

When using the deflective mirror accessory, subtract this value from the standard reading distances in this section to calculate the effective reading distance measured from the mirror surface.

The following table provides typical working ranges on photographic-quality barcodes at a 20° tilt pitch under normal room light (30 fcd) while operating at room temperature, 72°F (22°C).

Table 7 Typical Working Ranges

Symbology/Resolution	Near	Far
5 mil Code 128	2 in./5.08 cm	10 in./25.4 cm
10 mil Code 128	2 in./5.08 cm	15 in./38.1 cm
15 mil Code 128	2 in./5.08 cm	20 in./50.8 cm
20 mil Code 128	2 in./5.08 cm	24 in./61.0 cm
5 mil DataMatrix	2 in./5.08 cm	7.7 in./19.56 cm
10 mil DataMatrix	2 in./5.08 cm	15 in./38.1 cm
15 mil DataMatrix	2 in./5.08 cm	20 in./50.8 cm

NOTE: Printing resolution, contrast, illumination source, and ambient light may affect these values.

NOTE: Configurations with a polarizer may experience a further reduction in maximum reading distance in low ambient light.

The measurements in the following diagrams provide guaranteed reading distance for different resolutions when the target symbol is entirely contained inside the field of view in normal room light (30 fcd).

Figure 17 Guaranteed FS10/xS20 Reading Distances

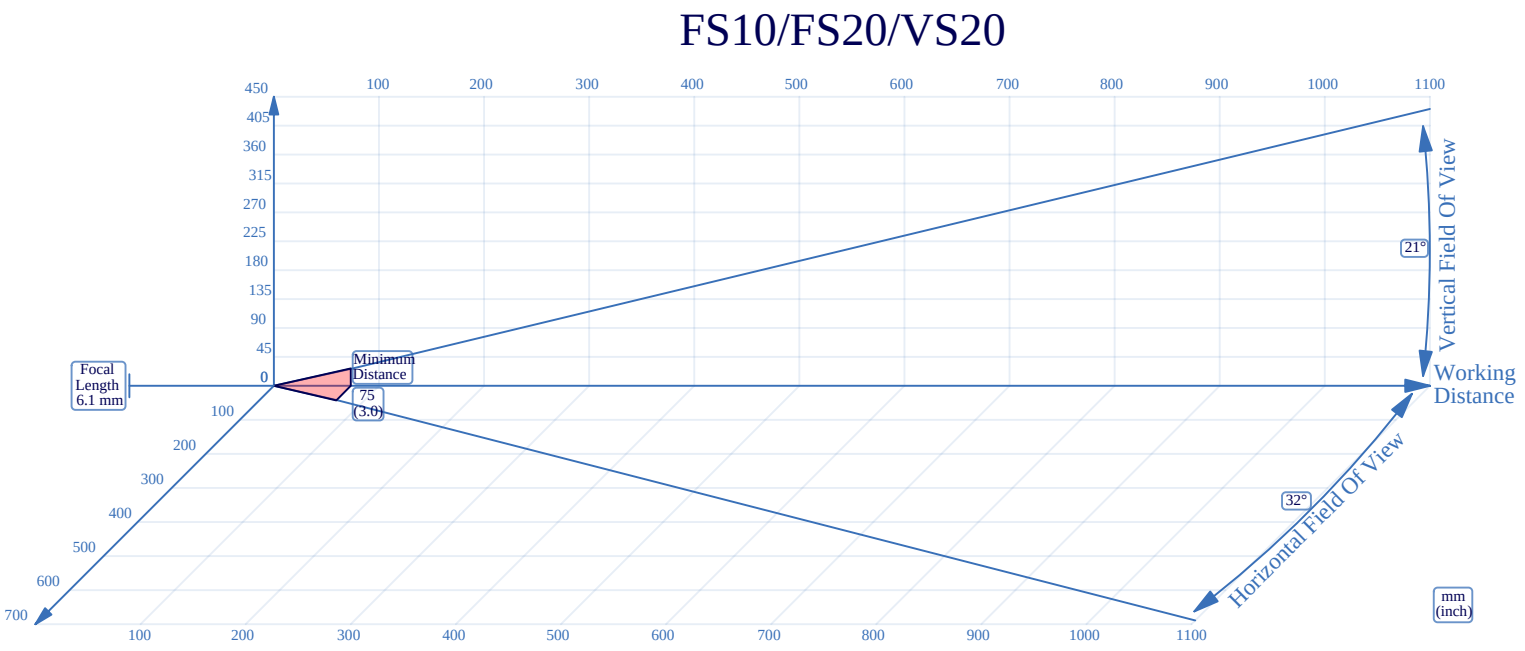

ECC 200 Reading Distances

Figure 18 Guaranteed ECC 200 Reading Distances

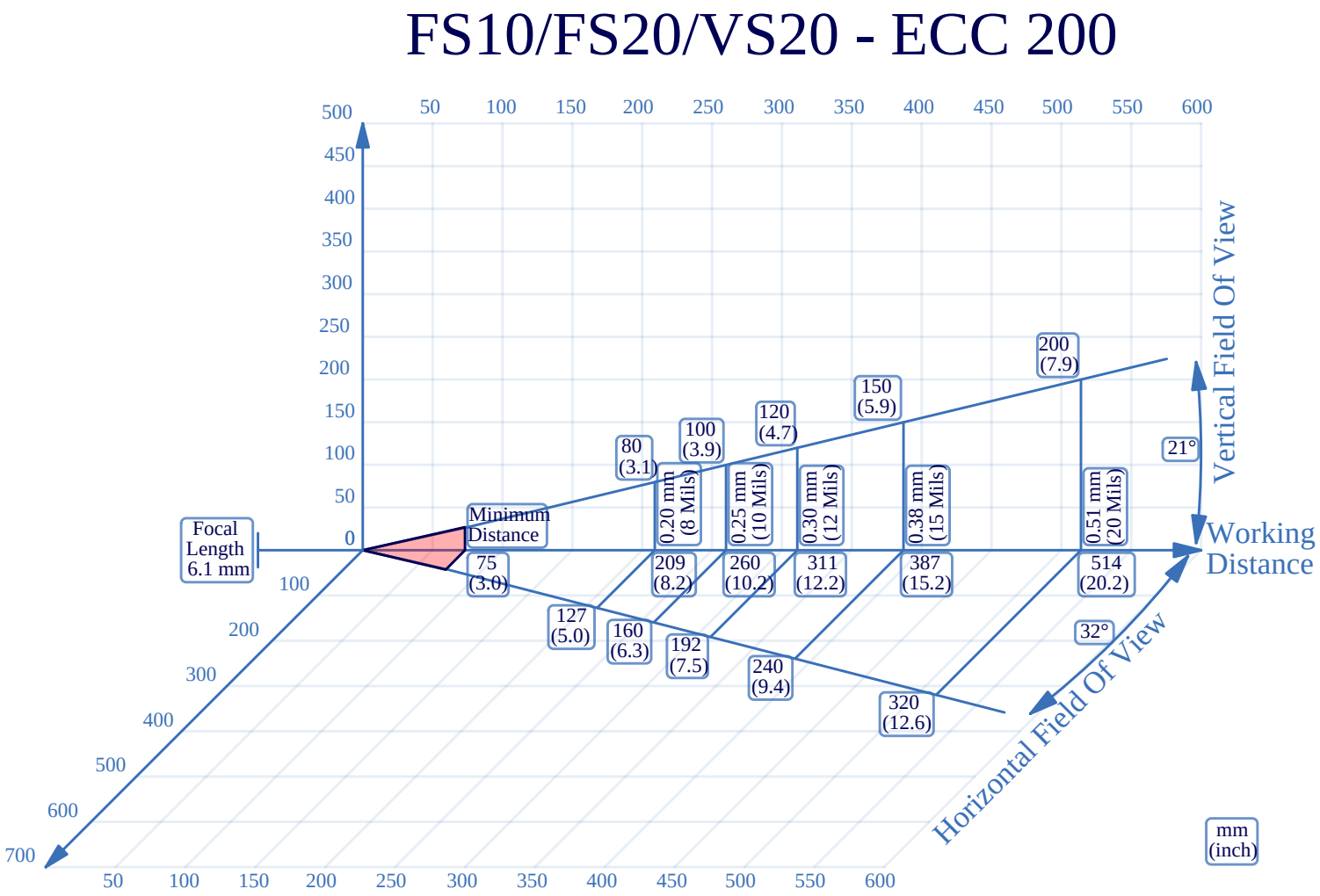

Code 128 Reading Distances

Figure 19 Guaranteed Code 128 Reading Distances

