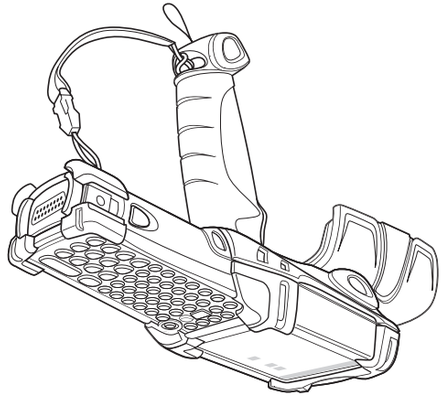

symbol®
The Enterprise Mobility Company™

MC9060R-G RFID

For Embedded Windows® CE .NET
Licensing, Patent and Regulatory Information

© 2004-2005 SYMBOL TECHNOLOGIES, INC. All rights reserved.

Symbol reserves the right to make changes to any product to improve reliability, function, or design.

Symbol does not assume any product liability arising out of, or in connection with, the application or use of any product, circuit, or application described herein.
No license is granted, either expressly or by implication, estoppel, or otherwise under any patent right or patent, covering or relating to any combination, system, apparatus, machine, material, method, or process in which Symbol products might be used. An implied license exists only for equipment, circuits, and subsystems contained in Symbol products.
Symbol and the Symbol logo are registered trademarks of Symbol Technologies, Inc. Other product names mentioned in this manual may be trademarks or registered trademarks of their respective companies and are hereby acknowledged.

Symbol Technologies, Inc.
One Symbol Plaza
Holtsville, N.Y. 11742-1300
http://www.symbol.com

Patents

This product is covered by one or more of the patents listed on the Web site: www.symbol.com/patents.

Warranty

For the complete Symbol hardware product warranty statement, go to: http://www.symbol.com/warranty.

Ergonomic Recommendations

Caution: In order to avoid or minimize the potential risk of ergonomic injury follow the recommendations below. Consult with your local Health & Safety Manager to ensure that you are adhering to your company's safety programs to prevent employee injury.

- Reduce or eliminate repetitive motion
- Maintain a natural/neutral position
- Reduce or eliminate excessive force
- Keep objects that are used frequently within easy reach
- Perform tasks at correct heights
- Reduce or eliminate vibration
- Reduce or eliminate direct pressure
- Provide adjustable workstations
- Provide adequate clearance
- Provide a suitable working environment
- Improve work procedures.

Regulatory Information

All Symbol devices are designed to be compliant with rules and regulations in locations they are sold and will be labeled as required. Any changes or modifications to Symbol Technologies equipment, not expressly approved by Symbol Technologies, could void the user's authority to operate the equipment. Antenna's, use only the supplied or an approved replacement antenna. Unauthorized antennas, modifications, or attachments could cause damage and may violate regulations.

Radio Modules

This device contains an approved radio module. This module is identified below:

- Symbol RLAN (11Mbps DSSS) radio module, Type: 21-64436.

Power Supply

Use only a Symbol-approved power supply output rated 11-16 Vdc and minimum 2A. The power supply is certified to EN60950 with SELV outputs. Use of alternative power supply will invalidate any approval given to this device and may be dangerous.
Benutzen Sie nur eine Symbol Technologies genehmigt in den Ausgabe: 11-16Vdc und minimum 2A. Die Stromversorgung ist bescheinigt nach EN60950 mit SELV Ausgaben.

⚠ *FCC RF Exposure Guidelines*

Reducing RF Influence - Use Properly

It is advisable to use the device only in the normal operating position and it is recommended that no part of the human body be allowed to come too close to the antenna during operation of the equipment.

Handheld Devices

To comply with FCC RF exposure requirements, this device must be operated in the hand and must operate with a minimum separation distance of 20 cm or more from a person's body. Other operating configurations should be avoided.

Service Information

Before you use the unit, it must be configured to operate in your facility's network and run your applications.
If you have a problem running your unit or using your equipment, contact your facility's Technical or Systems Support. If there is a problem with the equipment, they will contact the Symbol Support Center:

United States	1-800-653-5350 1-631-738-2400	Canada	905-629-7226
United Kingdom	0800 328 2424	Asia/Pacific	+65-6796-9600
Australia	1-800-672-906	Austria/Österreich	01-5055794-0
Denmark/Danmark	7020-1718	Finland/Suomi	9 5407 580
France	01-40-96-52-21	Germany/Deutschland	6074-49020
Italy/Italia	2-484441	Mexico/México	5-520-1835
Netherlands/Nederland	315-2711700	Norway/Norge	+47 2232 4375
South Africa	11-809 5311	Spain/España Inside Spain	91 324 40 00
Sweden/Sverige	08 445 29 00	Outside Spain	+34 91 324 40 00
Latin America Sales Support	1-800-347-0178 Inside US +1-954-255-2610 Outside US		
Europe/Mid-East Distributor Operations	Contact local distributor or call +44 118 945 7360		

For the latest version of this guide go to: http://www.symbol.com/manuals.

72-68921-02
Revision A — April 2005

Battery Charging Note

To charge the battery for the mobile device, battery and charger temperatures must be between +32° F and +104° F (0° C and +40° C).

Taiwan

EPA (Environmental Protection Administration) requires dry battery producing or importing firms in accordance with Article 15 of the Waste Disposal Act are required to indicate the recycling marks on the batteries used in sales, giveaway or promotion. Contact a qualified Taiwanese recycler for proper battery disposal.

「廢電池請回收」

Laser Devices

Symbol devices using lasers comply with US 21CFR1040.10, and IEC825-1:1993, EN60825-1:1994+A11:1996. The laser classification is marked on one of the labels on the device. Class 1 Laser devices are not considered to be hazardous when used for their intended purpose. The following statement is required to comply with US and international regulations:

Caution: Use of controls, adjustments or performance of procedures other than those specified herein may result in hazardous laser light exposure.

- Class 2 laser scanners use a low power, visible light diode. As with any very bright light source, such as the sun, the user should avoid staring directly into the light beam. Momentary exposure to a Class 2 laser is not known to be harmful.

Laser Labels

In accordance with Clause 5, IEC 825 and EN60825, the following information is provided to the user:

ENGLISH

CLASS 1 CLASS 1 LASER PRODUCT
CLASS 2 LASER LIGHT
DO NOT STARE INTO BEAM
CLASS 2 LASER PRODUCT

HEBREW

מוצר לייזר רמה 1 רמה 1
אור לייזר רמה 2
אין להביט אל תוך הזרם
מוצר לייזר רמה 2

DANISH / DANSK

KLASSE 1 KLASSE 1 LASERPRODUKT
KLASSE 2 LASERLYF
SE IKKE IND I STRÅLEN
KLASSE 2 LASERPRODUKT

ITALIAN / ITALIANO

CLASSE 1PRODOTTO AL LASER DI CLASSE 1
CLASSE 2LUCE LASER
NON FISSARE IL RAGGIOPRODOTTO
AL LASER DI CLASSE 2

DUTCH / NEDERLANDS

KLASSE 1 KLASSE-1 LASERPRODUKT
KLASSE 2 LASERLICHT
NIET IN STRAAL STAREN
KLASSE-2 LASERPRODUKT

NORWEGIAN / NORSK

KLASSE 1LASERPRODUKT, KLASSE 1
KLASSE 2LASERLYS IKKE STIRR INN I LYSSTRÅLEN
LASERPRODUKT, KLASSE 2

Radio Frequency Interference Requirements

Tested to comply with FCC Standards
FOR HOME OR OFFICE USE

Note: This equipment has been tested and found to comply with the limits for a Class B digital device, pursuant to Part 15 of the FCC rules. These limits are designed to provide reasonable protection against harmful interference in a residential installation. This equipment generates, uses and can radiate radio frequency energy and, if not installed and used in accordance with the instructions, may cause harmful interference to radio communications. However there is no guarantee that interference will not occur in a particular installation. If this equipment does cause harmful interference to radio or television reception, which can be determined by turning the equipment off and on, the user is encouraged to try to correct the interference by one or more of the following measures:

- Reorient or relocate the receiving antenna.
- Increase the separation between the equipment and receiver.
- Connect the equipment into an outlet on a circuit different from that to which the receiver is connected.
- Consult the dealer or an experienced radio/TV technician for help.

Radio Transmitters (Part 15)

This device complies with Part 15 of the FCC Rules. Operation is subject to the following two conditions: (1) this device may not cause harmful interference, and (2) this device must accept any interference received, including interference that may cause undesired operation.

Radio Frequency Interference Requirements - Canada

This Class B digital apparatus complies with Canadian ICES-003.

Cet appareil numérique de la classe B est conforme à la norme NMB-003 du Canada.

Scanner Labeling

CAUTION- LASER LIGHT WHEN OPEN. DO NOT STARE INTO BEAM.
ATTENTION- LUMIÉRE LASER EN CAS D'OUVERTURE. NE PAS REGARDER DANS LE FAISCEAU.
VORSICHT- LASERLICHT,WENN ABDECKUNG GEÖFFNET. NICHT IN DEN STRAHL BLICK
COMPLIES WITH 21CFR1040.10,IEC 825-1:1993/EN60825-1:1994 + A11:1996

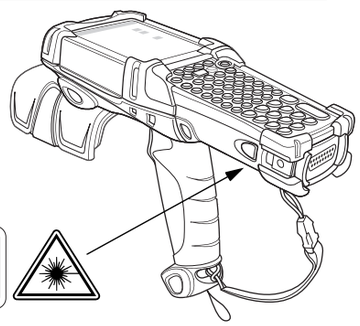

LASERLICHT - NICHT IN DEN STRAHL BLICKEN.
LASER KLASSE 2
LUMI¨RE LASER -NE PAS REGARDER DANS
LE FAISCEAU APPAREIL LASER DE CLASSE 2.
CAUTION-LASER LIGHT. DO NOT STARE INTO BEAM.
CLASS 2 LASER PRODUCT 630-680 nM, 1 mW

FINNISH / SUOMI

LUOKKA 1 LUOKKA 1 LASERTUOTE
LUOKKA 2 LASERVALO
ÄLÄ TUIJOTA SÄDETTÄ
LUOKKA 2 LASERTUOTE

PORTUGUESE / PORTUGUÊS

CLASSE 1PRODUTO LASER DA CLASSE 1
CLASSE 2LUZ DE LASER NÃO FIXAR O RAIO LUMINOSO
PRODUTO LASER DA CLASSE 2

FRENCH / FRANÇAIS

CLASSE 1 PRODUIT LASER DE CLASSE 1
CLASSE 2 LUMIERE LASER
NE PAS REGARDER LE RAYON FIXEMENT
PRODUIT LASER DE CLASSE 2

SPANISH / ESPAÑOL

CLASE 1 PRODUCTO LASER DE LA CLASE 1
CLASE 2 LUZ LASER
NO MIRE FIJAMENTE EL HAZ
PRODUCTO LASER DE LA CLASE 2

GERMAN / DEUTCH

KLASSE 1 LASERPRODUKT DER KLASSE 1
KLASSE 2 LASERSTRAHLEN
NICHT DIREKT IN DEN LASERSTRAHL SCHAUEN
LASERPRODUKT DER KLASSE 2

SWEDISH / SVENSKA

KLASS 1 LASERPRODUKT KLASS 1
KLASS 2 LASERLJUS STIRRA INTE MOT STRÅLEN
LASERPRODUKT KLASS 2

JAPANESE / 日本語
クラス1 クラス1 レーザ製品
クラス2 レーザ光線
光線を直視しないでください
クラス2 レーザ製品

CHINESE / 简体中文
1 类 1 类激光产品
2 类 激光
切勿注视光束
2 类激光产品

KOREAN / 한국어
1등급 1등급 레이저 제품
2등급 레이저 광선
이 광선을 주시하지 마십시오.
2등급 레이저 광선

Radio Transmitters

This device complies with RSS 210 of Industry & Science Canada. Operation is subject to the following two conditions: (1) this device may not cause harmful interference and (2) this device must accept any interference received, including interference that may cause undesired operation.

Label Marking: The Term "IC:" before the radio certification only signifies that Industry Canada technical specifications were met.

Battery Information

Symbol rechargeable battery packs are designed and constructed to the highest standards within the industry.
However, there are limitations to how long a battery can operate or be stored before needing replacement. Many factors affect the actual life cycle of a battery pack, such as heat, cold, harsh environmental conditions and severe drops.
When batteries are stored over six (6) months, some irreversible deterioration in overall battery quality may occur. Store batteries discharged in a dry, cool place, removed from the equipment to prevent loss of capacity, rusting of metallic parts and electrolyte leakage.
When storing batteries for one year or longer, they should be charged and discharged at least once a year. If an electrolyte leakage is observed, avoid any contact with affected area and properly dispose of the battery.
Replace the battery when a significant loss of run time is detected.
Standard warranty period for all Symbol batteries is 30 days, regardless if the battery was purchased separately or included as part of the mobile computer or bar code scanner. For more information on Symbol batteries, please visit:
http:/mysymbolcare.symbol.com/battery/batbasics1.html.